Cat.no.:E-PS

Cat.no.:E-GGC

Cat.no.:E-CSS

Cat.no.:E-FSV

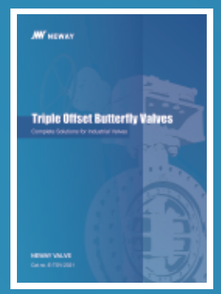

Cat.no.:TOBV

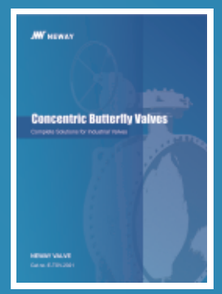

Cat.no.:E-CBV

Cat.no.:E-CV

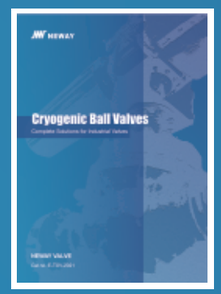

Cat.no.:E-CBV

Cat.no.:E-FWBV

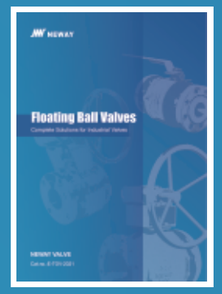

Cat.no.:E-FBV

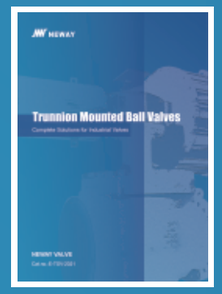

Cat.no.:E-TMBV

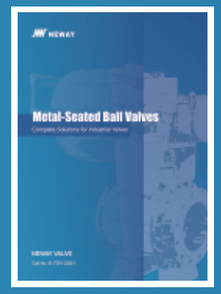

Cat.no.:E-MSBV

NEWAY

NEWAY VALVE (SUZHOU) CO., LTD.

No.666 Taishan Road, Suzhou New District, P.R. China
Post Code: 215129
Tel: 86-512-666-51365
Fax: 86-512-666-18930-2102
E-mail: overseas.sales@neway.com.cn
http://www.newayvalve.com

Distributed by:

Cat.no.:E-FSV-2021

NEWAY

Forged Steel Valves

Complete Solutions for Industrial Valves

NEWAY VALVE

Cat.no.:E-FSV-2021

Table of Contents

Introduction

1 Quality Commitment

2 How To Order

3~8 Forged Steel Gate Valve

9~15 Forged Steel Globe Valve

16~17 Forged Steel Check Valve

18~21 Forged Steel Lifting Check Valve

22~23 Forged Steel Bellows Gate Valve

24~25 Forged Steel Bellows Globe Valve

26 Optional Design Feature

26~27 Forged Steel Cryogenic Gate Valve

28~29 Forged Steel Cryogenic Globe Valve

30 Forged Steel Cryogenic Lifting Check Valve

31 Optional Design Feature

32 Neway Factory & Overseas Subsidiaries

Complete Solutions for Industrial Valves

As a global leader of valve manufacturing, Neway (SSE:603699) is dedicated to the production, research, and development of industrial valves. Neway is committed to providing complete valve solutions to all industries through advanced engineering and innovation.

Neway's product line includes Ball, Butterfly, Gate, Globe, Check, Nuclear, Control, Subsea, Safety valves. Our high quality standards and innovative ability are recognized by many global end users and EPCs. Neway valves are utilized in a wide variety of industries and working conditions such as Refining, Chemical, Coal Chemical, Offshore(including subsea), Air Separation, LNG, Nuclear Power, Power Generation, and Pipeline Transmission applications.

Facilities & Service

Neway has developed a sophisticated multi-plant management system operating one valve assembly plant, one API6A valve plant, three foundries, and one R&D center. Our largest assembly plant was expanded in 2013, and it now covers 35,000 square meters.

Advanced software (ANSYS, FE-Safe, CF-Design, Siemens PLM and NX) is applied here at Neway for the Research & Development of products. We use SAP to control the traceability and status of all products during the manufacturing process. In order to ensure the safety, eco-friendliness, and reliability of our products, we use the most advanced fire-safe, cryogenic, high pressure, and fugitive emission test equipment.

As part of Neway's global strategy, to provide better service to our customers, we have established our overseas subsidiaries in USA, Netherlands, Italy, Singapore, and Dubai along with over 80 agents and distributors worldwide.

Quality Assurance

Neway is dedicated to the pursuit of "Zero Defect". We maintain a quality management system that encompasses our entire operation from order entry, to final inspection. Through Neway's continuous efforts, our products have sucessfully achieved industrial certificates including ISO 9001, API 6A, API 6D, CE/PED, ASME N & NPT, TA-Luft, ABS, CU-TR, and Fire-Safe approvals.

API 6A

ISO9001

CE/PED

Fire Safe Test Certificate

TA Luft

ABS

API 6D

API 591

Neway recognizes the importance of valve quality for the safety and protection of personnel health and property. It is our quality commitment to focus our resources to provide our customers with first class products at a competitive price, designed, manufactured, inspected and tested in accordance with our customers specifications and complying with all international standards.

Current industrial standards do not always take into consideration the likelihood and consequences of possible deterioration in service, related to specific service fluids or the external environments in which they operate. Therefore we request that our customers communicate with our engineering department. Our valve optimization program continuously strives to provide valves that withstand deterioration in service, and ensure safety over the valves expected lifetime.

NEWAY reserves the right to change design, materials or specifications without notice and free of obligation to furnish or install such changes on products previouly sold.

How To Order

1	G	8	S	-	M	,	C40	/	No.8
①	②	③	④		⑤		⑥		⑦

Neway figure numbers are designed to cover essential features.
When ordering,please show figure number to avoid misunderstanding of your requirements.
However a detailed description must accompany with any special orders.

Following descriptions provide a basic guideline in valve specification:

① Valve Size

② Valve Type

Valve Type	Gate Valve	Gate Valve	Y Type Globe Valve	Swing Check	Piston Check	Y Type Piston Check
Symbol	G	GL	GLY	S	P	PY

③ Valve Class

ANSI Class	150	300	600	800	900	1500	2500
Symbol	1	3	6	8	9	15	25

④ End Connection

End Connection	Socket Welding End	NPT Screwed End	Butt Welding End	Screwed×Socket	Raised Flange	RTJ Flange
Symbol	S	N	B	SN	R	J

⑤ Special Code

Description	Welding Bonnet	RTJ Bonnet	Full Port	Electric Actuator	Pneumatic Actuator
Symbol	FW	J	FP	M	P

⑥ Body Meterials

Body Materials	C40	L70	H41	H42	H43	S40	S41	S42	S43
ASTM Ref.	A105N	A350 Gr.LF2	A182 Gr.F11	A182 Gr.F22	A182 Gr.F5	A182 Gr.F304	A182 Gr.F316	A182 Gr.F304L	A182 Gr.F316L

⑦ Trim Materials

Symbol	Disc Surface	Seat Surface	Stem Materials
No.1	13Cr	13Cr	ASTM A182-F6a
No.2	18Cr-8Ni	18Cr-8Ni	ASTM A182-F304
No.5	Hard faced	Hard faced	ASTM A182-F6a
No.8	13Cr	Hard faced	ASTM A182-F6a
No.10	18Cr-8Ni-Mo	18Cr-8Ni-Mo	ASTM A182-F316
No.12	18Cr-8Ni-Mo	Hard faced	ASTM A182-F316
No.15	18Cr-8Ni	Hard faced	ASTM A182-F304
No.16	Hard faced	Hard faced	ASTM A182-F316

Forged Steel Gate Valve

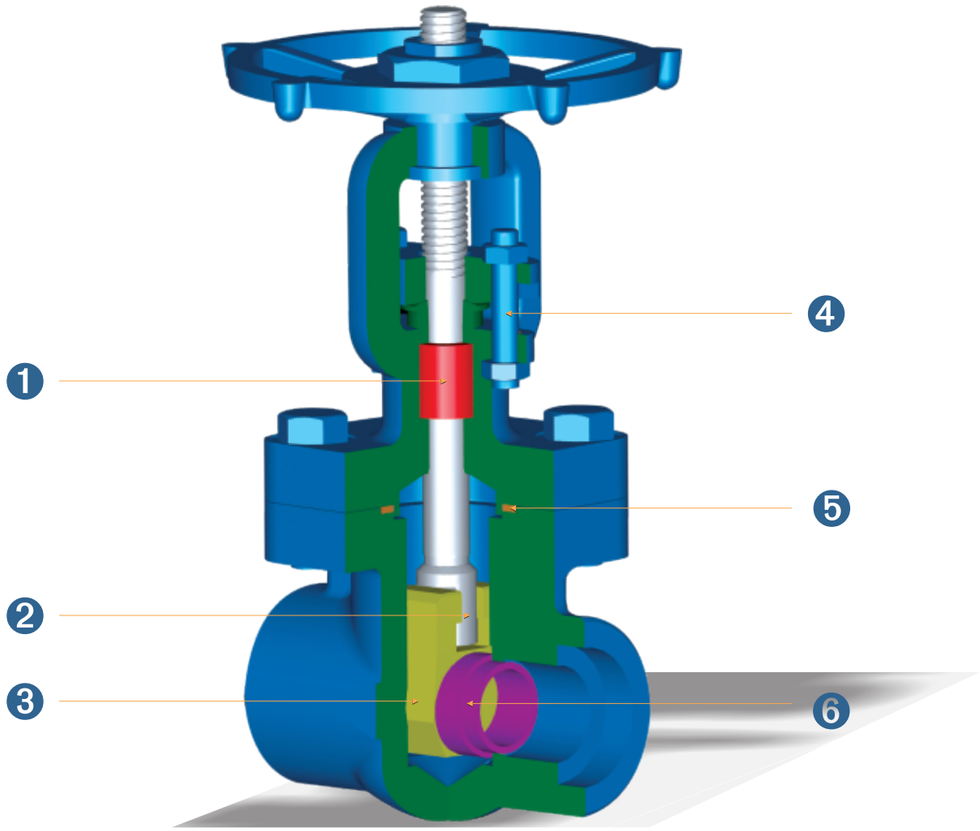

1. A positive backseat, high quality packing material and improved stuffing box design ensure tighter stem seal.
2. The T-head stem design provides positive disc to stem connection and ensures effective seating operation.
3. Fully guided solid wedge reduces wear on seating surfaces.
4. Stud and bolt arrangement facilitates packing maintenance.
5. Recessed Body-Bonnet Joint design captures the stainless steel spiral wound gasket ensuring body/bonnet sealing integrity.
6. Rolled-in seat design ensures tight and effective seat assembly.

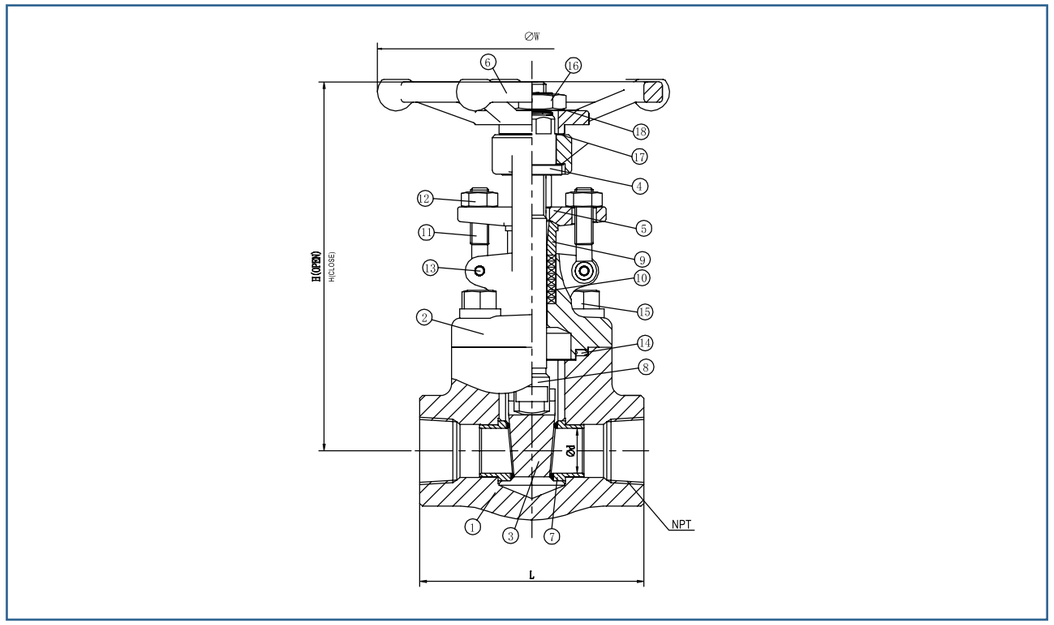

Bolted Bonnet

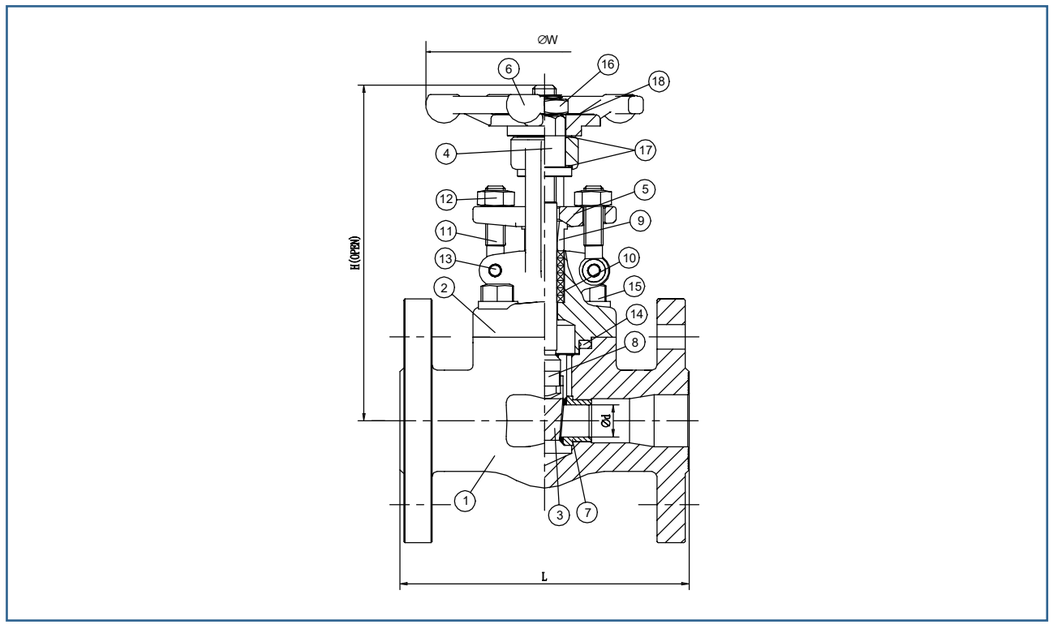

Integral Flanged Ends

Material List

NO.	Description of Parts	Material		
		Standard	High Temperature	Stainless Steel
1	BODY	ASTM A105N	ASTM A182 F11/F22	ASTM A182 F304/F316
2	BONNET	ASTM A105N	ASTM A182 F11/F22	ASTM A182 F304/F316
3	WEDGE	ASTM A276 410	ASTM A276 410	ASTM A182 F304/F316
4	STEM NUT	ASTM A276 410	ASTM A276 410	ASTM A276 410
5	GLAND FLANGE	ASTM A105N	ASTM A105N	ASTM A182 F316
6	HANDWHEEL	A197	A197	A197
7	SEAT RING	ASTM A276 410/STL.6 OVERLAY	ASTM A276 410/STL.6 OVERLAY	ASTM A182 F304/F316/STL.6 OVERLAY
8	STEM	ASTM A276 410	ASTM A276 410	ASTM A182 F304/F316
9	GLAND	ASTM A276 420	ASTM A276 420	ASTM A276 316
10	PACKING	GRAPHITE	GRAPHITE	GRAPHITE
11	STUD	ASTM A193-B7	ASTM A193-B16	ASTM A193-B8
12	NUT	ASTM A194-2H	ASTM A194-7	ASTM A194-8
13	PIN	ASTM A276 304	ASTM A276 304	ASTM A276 316
14	GASKET	SPIRAL WOUND GRAPHITE/316LSS	SPIRAL WOUND GRAPHITE/316LSS	SPIRAL WOUND GRAPHITE/316LSS
15	STUD	ASTM A193-B7	ASTM A193-B16	ASTM A193-B8
16	HANDWHEEL NUT	AISI 1020	AISI 1020	AISI 1020
17	WASHER	410	410	410
18	NAME PLATE	304SS	304SS	304SS

Class 800 Bolted Bonnet

Regular and Full Port - API602. Outside Screw & Yoke -Threaded and Socket Weld Ends

Full Port	Size		1/4		3/8		1/2		3/4		1		1-1/4		1-1/2		2	
End to End	L		mm	in	mm	in	mm	in	mm	in	mm	in	mm	in	mm	in	mm	in
			79	3.11	79	3.11	79	3.11	92	3.62	111	4.37	120	4.72	120	4.72	140	5.51
Bore Diameter	d		7.5	0.30	10	0.39	13	0.51	13	0.51	18	0.71	24	0.94	29	1.14	36.5	1.44
Center to Top (Open)	H	Bolted Bonnet	157	6.18	157	6.18	157	6.18	157	6.18	185	7.28	226	8.90	241	9.49	273	10.75
Handwheel	W		100	3.94	100	3.94	100	3.94	100	3.94	120	4.72	160	6.30	160	6.30	220	8.66

Class 150-300-600 Overall-end Flange, Bolted Bonnet, Structure Length-ASME B16.10

Regular Port -API 602. Outside Yoke & overall-end Flange -ASME B16.5

Regular Port		Size	1/2		3/4		1		1-1/2		2	
End to End			mm	in	mm	in	mm	in	mm	in	mm	in
	Class 150	L	108	4.25	117	4.61	127	5	165	6.5	178	7.01
	Class 300	L	140	5.51	152	5.98	165	6.50	190	7.48	216	8.50
	Class 600	L	165	6.50	190	7.48	216	8.50	241	9.49	292	11.50
Bore Diameter		d	10	0.39	12.2	0.48	18	0.71	29	1.14	37	1.46
Center to Top (Open)		H	157	6.18	157	6.18	185	7.28	241	9.49	273	10.75
Handwheel		W	100	3.94	100	3.94	120	4.72	160	6.30	220	8.66

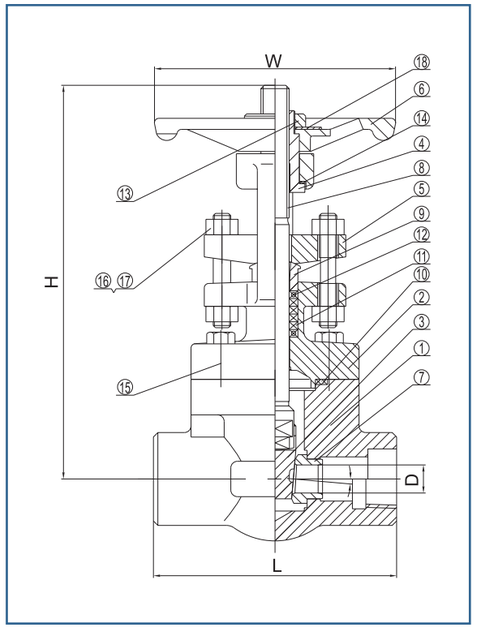

Bolted Bonnet

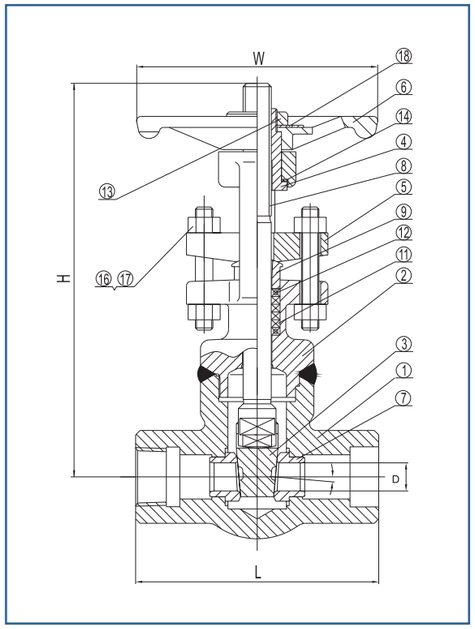

Welded Bonnet

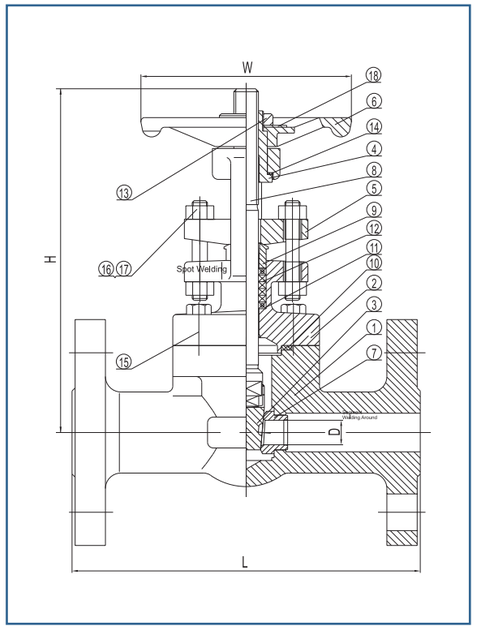

Integral Flanged Ends

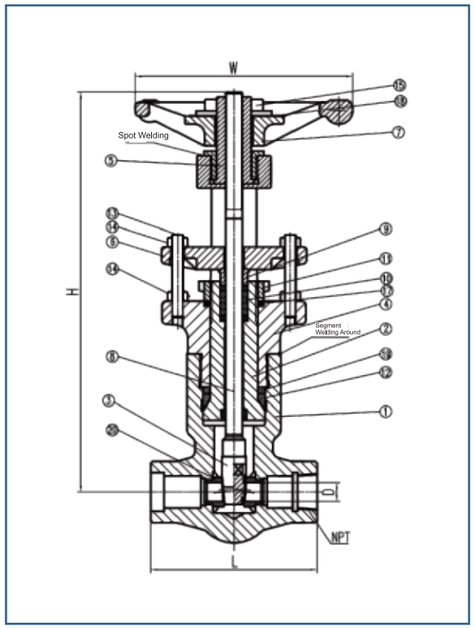

Pressure Seal Bonnet Connection

Material List

NO.	Description of Parts	Material		
		Standard	High Temperature	Stainless Steel
1	BODY	ASTM A105 N	ASTM A182-F11/F22	ASTM A182-F304/F316
2	BONNET	ASTM A105 N	ASTM A182-F11/F22	ASTM A182-F304/F316
3	WEDGE	ASTM A182-F6a	ASTM A182-F6a	ASTM A182-F304/F316
4	STEM NUT	ASTM A276-420	ASTM A276-420	ASTM A276-420
5	GLAND FLANGE	ASTMA216-WCB	ASTM A216-WCB	ASTM A351-CF8
6	HANDWHEEL	DUCTILE IRON	DUCTILE IRON	DUCTILE IRON
7	SEAT RING	ASTM A276-410/STL.OVERLAY	ASTM A276-410/STL.OVERLAY	ASTM A182-F304/F316/STL.6 OVERLAY
8	STEM	ASTM A182-F6a	ASTM A182-F6a	ASTM A182-F304/F316
9	GLAND	ASTM A276-420	ASTM A276-420	ASTM A276-304/316
10	GASKET	304SS/SPIRAL WOUND GRAPHITE	304SS/SPIRAL WOUND GRAPHITE	304/316SS/SPIRAL WOUND GRAPHITE
11	PACKING	GRAPHITE	GRAPHITE	GRAPHITE
12	PACKING	CARBON YARN	CARBON YARN	CARBON YARN
13	HANDWHEEL NUT	CARBON STEEL	CARBON STEEL	ASTM A276-304
14	WASHER	ASTM A276-304	ASTM A276-304	ASTM A276-304
15	STUD	ASTM A193-B7	ASTM A193-B16	ASTM A193-B8
16	BOLT	ASTMA193-B8	ASTM A193-B8	ASTM A193-B8
17	NUT	ASTM A194-8	ASTM A194-8	ASTM A194-8
18	NAME PLATE	ASTM A276-304	ASTM A276-304	ASTM A276-304

Class 800 Welded Bonnet

Regular and Full Port - API602. Outside Screw & Yoke -Threaded and Socket Weld Ends

Regular Port	Size		3/8		1/2		3/4		1		1-1/4		1-1/2		2	
Full Port	Size		1/4		3/8		1/2		3/4		1		1-1/4		1-1/2	
End to End	L		mm	in	mm	in	mm	in	mm	in	mm	in	mm	in	mm	in
			76	2.99	76	2.99	86	3.39	102	4.02	118	4.65	118	4.65	132	5.2
Bore Diameter	D		9.5	0.37	9.5	0.37	12.7	0.50	17.5	0.69	23.8	0.94	28.6	1.13	36.5	1.44
Center to Top (Open)	H	Welded Bonnet	157	6.19	157	6.19	165	6.51	192	7.57	272	10.70	277	10.92	283	11.15
Handwheel	W		90	3.54	90	3.54	90	3.54	110	4.33	150	5.91	150	5.91	150	5.91
Approx. Weight	Kg/Lb		1.5	3.31	1.5	3.31	2.0	4.41	3.0	6.61	4.0	8.82	5.5	12.13	7.5	16.53

Class 900/1500 Bolted Bonnet or Welded Bonnet

Regular and Full Port - API602. Outside Screw & Yoke -Threaded and Socket Weld Ends

Regular Port	Size		3/8		1/2		3/4		1		1-1/4		1-1/2		2	
Full Port	Size		1/4		3/8		1/2		3/4		1		1-1/4		1-1/2	
End to End	L		mm	in	mm	in	mm	in	mm	in	mm	in	mm	in	mm	in
			90	3.54	90	3.54	104	4.09	120	4.72	130	5.12	130	5.12	150	5.91
Bore Diameter	D		6.5	0.26	6.5	0.37	12.7	0.50	16	0.63	22.5	0.89	27	1.06	35	1.38
Center to Top (Open)	H	Bolted Bonnet	163	6.41	163	6.41	190	7.47	225	8.85	263	10.33	264	10.41	319	12.57
		Welded Bonnet	177	6.98	177	6.98	206	8.09	240	9.44	271	10.66	276	10.86	325	12.81
Handwheel	W		90	3.54	90	3.54	110	4.33	150	5.91	150	5.91	150	5.91	180	7.09
Approx. Weight	Kg/Lb		2.5	5.51	2.5	5.51	3.5	7.72	5.5	12.13	8.0	17.64	8.5	18.74	14.5	31.97

Class 900/1500 Pressure Seal Bonnet

Regular and Full Port - API602. Outside Screw & Yoke -Threaded and Socket Weld Ends

Regular Port	Size	3/8		1/2		3/4		1		1-1/4		1-1/2		2	
Full Port	Size	1/4		3/8		1/2		3/4		1		1-1/4		1-1/2	
End to End	L	mm	in	mm	in	mm	in	mm	in	mm	in	mm	in	mm	in
		-	-	120	4.72	120	4.72	140	5.51	178	7.01	178	7.01	216	8.50
Bore Diameter	D	-	-	9.5	0.37	12.7	0.37	16	0.63	27	1.06	27	1.06	35	1.38
Center to Top (Open)	H	-	-	230	9.06	294	11.57	337.5	13.29	396.5	15.61	396.5	15.61	449	17.68
Handwheel	W	-	-	110	4.33	110	4.33	150	5.91	150	5.91	150	5.91	180	7.09
Approx. Weight	Kg/Lb	-	-	3.8	8.38	5.3	11.68	8.3	18.30	12.8	28.22	12.8	28.22	21.8	48.06

Class 2500 Welded Bonnet

Regular and Full Port - ASME B16.34. Outside Screw & Yoke -Threaded and Socket Weld Ends

Regular Port	Size	3/8		1/2		3/4		1		1-1/4		1-1/2		2	
Full Port	Size	1/4		3/8		1/2		3/4		1		1-1/4		1-1/2	
End to End	L	mm	in	mm	in	mm	in	mm	in	mm	in	mm	in	mm	in
		-	-	178	7.01	178	7.01	186	7.32	232	9.13	232	9.13	279	10.98
Bore Diameter	D	-	-	9.0	0.35	12.0	0.47	15	0.59	27	1.06	27	1.06	35	1.38
Center to Top (Open)	H	-	-	295	11.61	295	11.61	345	13.58	410	16.14	410	16.14	460	18.11
Handwheel	W	-	-	150	5.91	150	5.91	180	7.09	250	9.84	250	9.84	350	13.78
Approx. Weight	Kg/Lb	-	-	8.0	17.64	8.0	17.64	11	24.25	20	44.09	20	44.09	25	55.12

Class 2500 Pressure Seal Bonnet

Regular and Full Port - ASME B16.34. Outside Screw & Yoke -Threaded and Socket Weld Ends

Regular Port	Size	3/8		1/2		3/4		1		1-1/4		1-1/2		2	
Full Port	Size	1/4		3/8		1/2		3/4		1		1-1/4		1-1/2	
End to End	L	mm	in	mm	in	mm	in	mm	in	mm	in	mm	in	mm	in
		-	-	178	7.01	178	7.01	186	7.32	232	9.13	232	9.13	279	10.98
Bore Diameter	D	-	-	9.0	0.35	12.0	0.47	15	0.59	27	1.06	27	1.06	35	1.38
Center to Top (Open)	H	-	-	383	15.08	383	15.08	406.5	16.00	454.5	17.89	454.5	17.89	540	21.26
Handwheel	W	-	-	150	5.91	150	5.91	180	7.09	250	9.84	250	9.84	350	13.78
Approx. Weight	Kg/Lb	-	-	8.0	22.05	10.0	22.05	13	28.66	21.8	48.06	21.8	48.06	28	61.73

NEWAY reserves the right to change design, materials or specifications without notice and free of obligation to furnish or install such changes on products previouly sold.

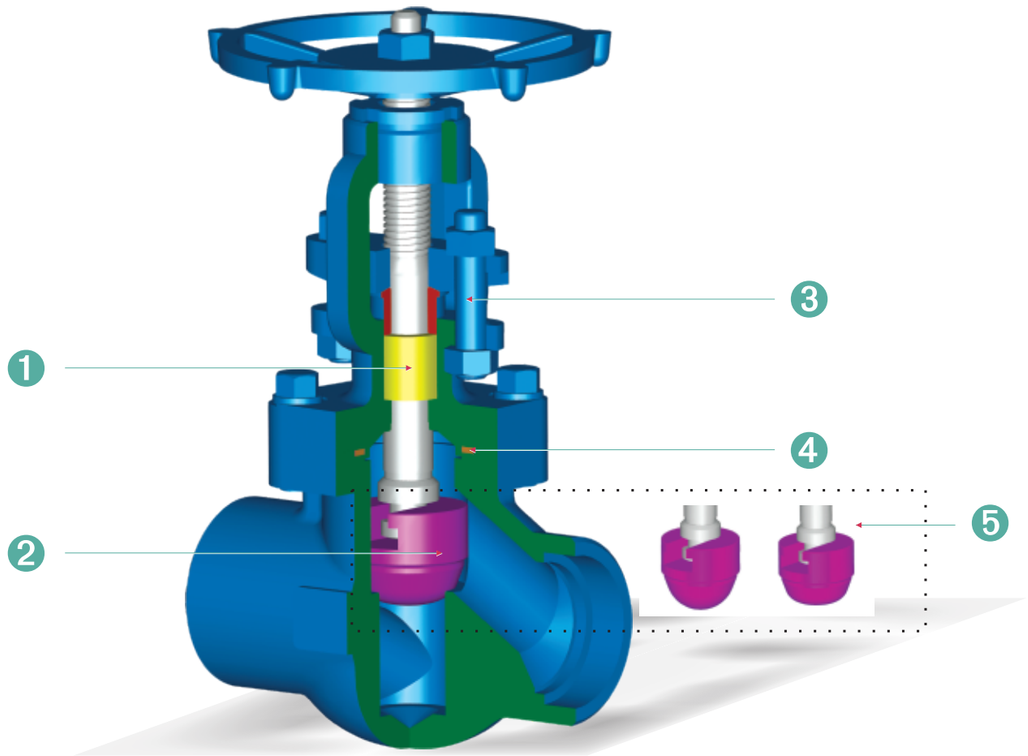

1. A positive backseat, high quality packing material and improved stuffing box design ensure tighter stem seal.
2. Fully guided solid disc ensures perfect alignment of disc and seat and reduces wear on seating surfaces.
3. Stud and bolt arrangement facilitates packing maintenance.
4. Recessed Body-Bonnet Joint design captures the stainless steel spiral wound gasket ensuring body/bonnet sealing integrity.
5. Plug style discs are standard; others are available upon request.

NEWAY reserves the right to change design, materials or specifications without notice and free of obligation to furnish or install such changes on products previouly sold.

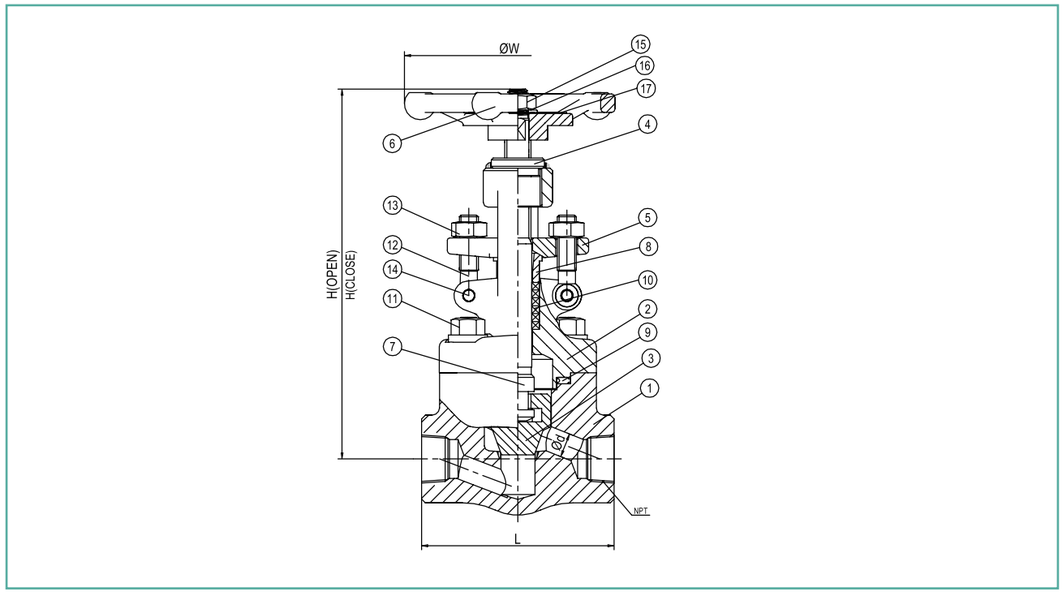

Bolted Bonnet

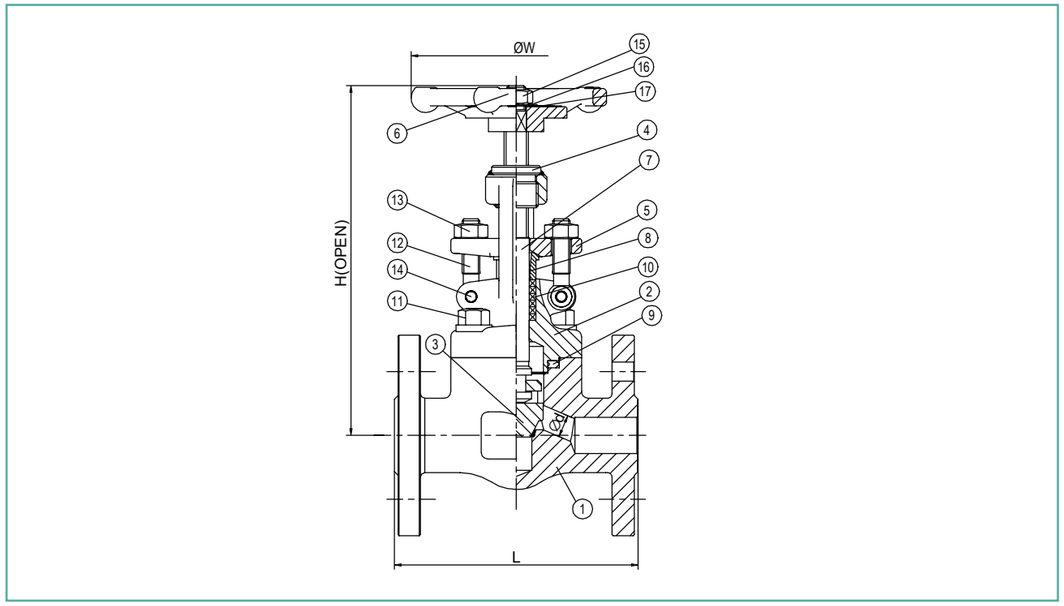

Integral Flanged Ends

Material List

NO.	Description of Parts	Material		
		Standard	High Temperature	Stainless Steel
1	BODY	ASTM A105N/STL.6 OVERLAY	ASTM A182 F11/F22/STL.6 OVERLAY	ASTM A182 F304/F316/STL.6 OVERLAY
2	BONNET	ASTM A105N	ASTM A182 F11/F22	ASTM A182 F304/F316
3	DISC	ASTM A276 410	ASTM A276 410	ASTM A182 F304/F316
4	STEM NUT	ASTM A276 410	ASTM A276 410	ASTM A276-410
5	GLAND FLANGE	ASTM A105N	ASTM A105N	ASTM A182 F316
6	HANDWHEEL	ASTM A197	ASTM A197	ASTM A197
7	STEM	ASTM A276 410	ASTM A276 410	ASTM A182 F304/F316
8	GLAND	ASTM A276 420	ASTM A276 420	ASTM A276 316
9	GASKET	SPIRAL WOUND GRAPHITE/316L SS	SPIRAL WOUND GRAPHITE/316L SS	SPIRAL WOUND GRAPHITE/316L SS
10	PACKING	GRAPHITE	GRAPHITE	GRAPHITE
11	BOLT	ASTM A193-B7	ASTM A193-B16	ASTM A193-B8
12	STUD	ASTM A193-B7	ASTM A193-B16	ASTM A193-B8
13	NUT	ASTM A194-2H	ASTM A194-7	ASTM A194-8
14	PIN	ASTM A276 304	ASTM A276 304	ASTM A276 316
15	HANDWHEEL NUT	ASTM A194-2H	ASTM A194-7	ASTM A194-8
16	WASHER	ASTM A276-410	ASTM A276-410	ASTM A276-410
17	NAME PLATE	304SS	304SS	304SS

Class 800 Bolted Bonnet

Regular and Full Port - API602. Outside Screw & Yoke -Threaded and Socket Weld Ends

Full Port	Size		1/4		3/8		1/2		3/4		1		1-1/4		1-1/2		2	
End to End	L		mm	in	mm	in	mm	in	mm	in	mm	in	mm	in	mm	in	mm	in
			79	3.11	79	3.11	79	3.11	92	3.62	111	4.37	120	4.72	152	5.98	172	6.77
Bore Diameter	d		6.8	0.27	6.8	0.27	9.5	0.37	13	0.51	18	0.69	23.5	0.93	28.5	1.12	36.5	1.44
Center to Top (Open)	H	Bolted Bonnet	161	6.34	161	6.34	167	6.57	167	6.57	196	7.72	236	9.29	252	9.92	282	11.10
Handwheel	W		100	3.94	100	3.94	100	3.94	100	3.94	120	4.72	160	6.30	160	6.30	220	8.66

Class 150-300-600 Overall-end Flange, Bolted Bonnet, Structure Length-ASME B16.10

Regular Port -API 602. Outside Yoke & overall-end Flange -ASME B16.5

Regular Port		Size	1/2		3/4		1		1-1/4		1-1/2		2	
			mm	in	mm	in	mm	in	mm	in	mm	in	mm	in
End to End	Class 150	L	108	4.25	117	4.61	127	5	140	5.51	165	6.50	203	7.99
	Class 300	L	152	5.98	178	7.01	203	7.99	-	-	229	9.02	267	10.51
	Class 600	L	165	6.50	190	7.48	216	8.50	-	-	241	9.49	292	11.50
Bore Diameter		d	9.5	0.37	13	0.51	18	0.69	23.5	0.93	28.5	1.12	36.5	1.44
Center to Top (Open)		H	167	6.57	167	6.57	196	7.72	236	9.29	252	9.92	282	11.10
Handwheel		W	100	3.94	100	3.94	120	4.72	160	6.30	160	6.30	220	8.66

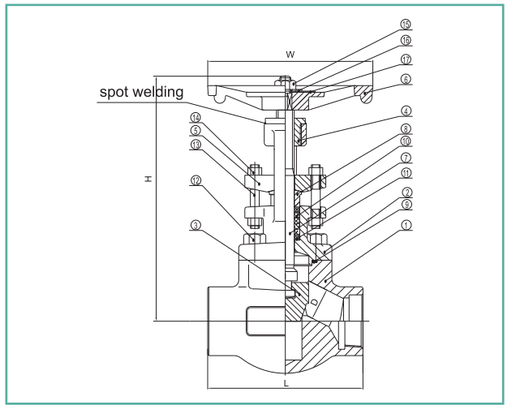

Bolted Bonnet

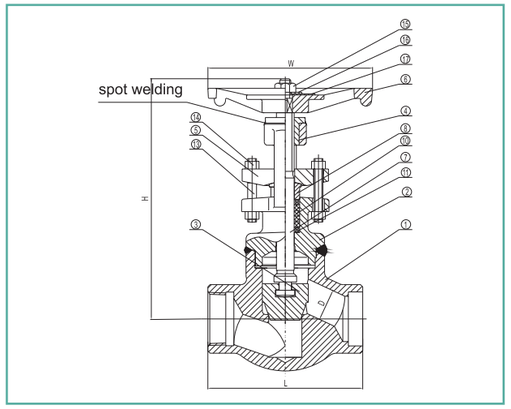

Welded Bonnet

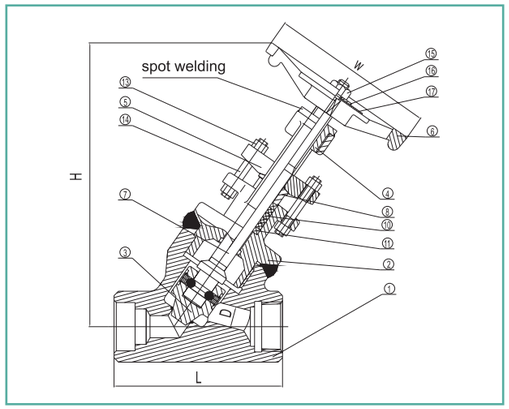

Y Pattern Welded Bonnet

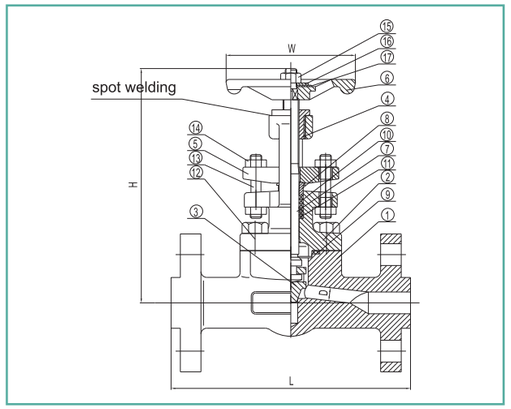

Integral Flanged Ends

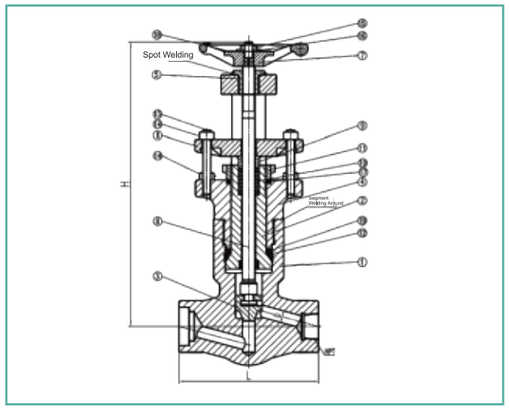

Pressure Seal Bonnet

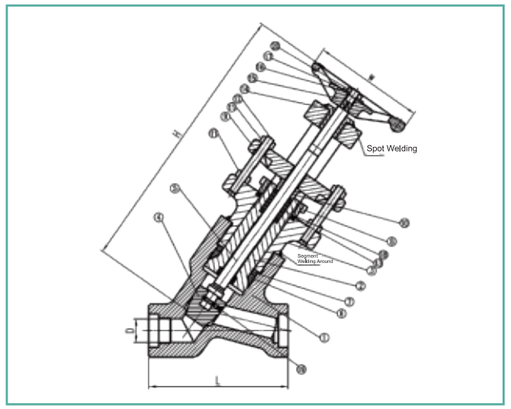

Y-Pattern, Pressure Seal Bonnet

Material List

NO.	Description of Parts	Material		
		Standard	High Temperature	Stainless Steel
1	BODY	ASTM A105/STLOVERLAY	ASTMA182-F11/F22/STL OVERLAY	ASTM A182-F304/F316/STL OVERLAY
2	BONNET	ASTMA105	ASTM A182-F11/F22	ASTM A182-F304/F316
3	DISC	ASTM A182-F6a	ASTM A182-F6a	ASTM A182-F304/F316
4	STEM NUT	ASTM A276-420	ASTM A276-420	ASTM A276-420
5	GLAND FLANGE	ASTM A216-WCB	ASTM A216-WCB	ASTM A351-CF8
6	HANDWHEEL	DUCTILE IRON	DUCTILE IRON	DUCTILE IRON
7	STEM	ASTMA182-F6a	ASTM A182-F6a	ASTM A182-F304/F316
8	GLAND	ASTM A276-420	ASTM A276-420	ASTM A276-304/316L
9	GASKET	304SS/SPIRAL WOUND GRAPHITE	304SS/SPIRAL WOUND GRAPHITE	304/316SS/SPIRAL WOUND GRAPHITE
10	PACKING	GRAPHITE	GRAPHITE	GRAPHITE
11	PACKING	CARBON YARN	CARBON YARN	CARBON YARN
12	STUD	ASTM A193-B7	ASTMA193-B16	ASTM A193-B8
13	BOLT	ASTM A193-B8	ASTM A193-B8	ASTMA193-B8
14	NUT	ASTM A194-8	ASTM A194-8	ASTM A194-8
15	HANDWHEEL NUT	CARBON STEEL	CARBON STEEL	ASTM A276-304
16	HANDWHEEL WASHER	CARBON STEEL	CARBON STEEL	ASTM A276-304
17	NAME PLATE	ASTM A276-304	ASTM A276-304	ASTM A240-304

Class 800 Welded Bonnet

Regular and Full Port - API602. Outside Screw & Yoke -Threaded and Socket Weld Ends

Regular Port	Size		3/8		1/2		3/4		1		1-1/4		1-1/2		2	
Full Port	Size		1/4		3/8		1/2		3/4		1		1-1/4		1-1/2	
End to End	L		mm	in	mm	in	mm	in	mm	in	mm	in	mm	in	mm	in
			76	2.99	76	2.99	86	3.99	102	4.02	140	5.51	140	5.51	170	6.69
Bore Diameter	D		6.5	0.26	9.5	0.37	12.7	0.50	17.5	0.69	23.0	0.91	28.6	1.13	36.5	1.44
Center to Top (Open)	H	Welded Bonnet	150.8	5.94	150.8	5.94	166.8	6.57	206.3	8.12	270.3	10.64	281.3	11.07	350.3	13.79
Handwheel	W		90	3.54	90	3.54	90	3.54	110	4.33	150	5.91	150	5.91	150	5.91
Approx. Weight	Kg/Lb		2.0	4.41	2.0	4.41	2.5	5.51	3.5	7.72	7.0	15.43	7.0	15.43	10.5	23.15

Class 900/1500 Bolted Bonnet or Welded Bonnet

Regular and Full Port - API602. Outside Screw & Yoke -Threaded and Socket Weld Ends

Regular Port	Size		3/8		1/2		3/4		1		1-1/4		1-1/2		2	
Full Port	Size		1/4		3/8		1/2		3/4		1		1-1/4		1-1/2	
End to End	L		mm	in	mm	in	mm	in	mm	in	mm	in	mm	in	mm	in
			90	3.54	90	3.54	104	4.09	120	4.72	150	5.91	150	5.91	180	7.09
Bore Diameter	D		8.0	0.31	9.0	0.35	12.0	0.47	15	0.59	21	0.83	27	1.06	32	1.26
	H	Bolted Bonnet	165.7	6.52	165.7	6.52	191.8	7.55	226.8	8.93	278.3	10.96	280.3	11.04	312.3	12.30
		Welded Bonnet	179.7	7.07	179.7	7.07	207.3	8.16	239.7	9.44	281.8	11.09	285.8	11.25	316.3	12.45
Handwheel	W		90	3.54	90	3.54	110	4.33	150	5.91	150	5.91	180	7.09	180	7.09
Approx. Weight	Kg/Lb		2.5	5.51	2.5	5.51	3.0	6.61	5.5	12.13	8.5	18.74	8.5	18.74	14.5	31.97

Class 900/1500 Pressure Seal Bonnet

Regular and Full Port - API602. Outside Screw & Yoke -Threaded and Socket Weld Ends

Regular Port	Size	3/8		1/2		3/4		1		1-1/4		1-1/2		2	
Full Port	Size	1/4		3/8		1/2		3/4		1		1-1/4		1-1/2	
End to End	L	mm	in	mm	in	mm	in			mm	in	mm	in	mm	in
		120	4.72	120	4.72	120	4.72			165	6.50	178	7.01	216	8.50
Bore Diameter	D	8.0	0.31	9.0	0.35	12.0	0.47			21	0.83	27	1.06	30	1.18
Center to Top (Open)	H	285.3	11.23	85.3	11.23	285.3	11.23			395.8	15.58	395.8	15.58	446.8	17.59
Handwheel	W	150	5.91	150	5.91	150	5.91			200	7.87	200	7.87	250	9.84
Approx. Weight	Kg/Lb	7.5	16.53	7.5	16.53	7.5	16.53			18.5	40.79	19.0	41.89	28.5	62.83

Class 2500 Welded Bonnet

Regular and Full Port - ASME B16.34. Outside Screw & Yoke -Threaded and Socket Weld Ends

Regular Port	Size	3/8		1/2		3/4		1		1-1/4		1-1/2		2	
Full Port	Size	1/4		3/8		1/2		3/4		1		1-1/4		1-1/2	
End to End	L	mm	in	mm	in	mm	in	mm	in	mm	in	mm	in	mm	in
		120	4.72	120	4.72	140	5.51	186	7.32	232	9.13	232	9.13	279	10.98
Bore Diameter	D	8.0	0.31	9.0	0.35	12.0	0.47	15	0.59	19	0.75	27	1.06	27	1.06
Center to Top (Open)	H	205	8.07	205	8.07	260	10.24	302	11.89	340	13.39	340	13.39	390	15.35
Handwheel	W	150	5.91	150	5.91	180	7.09	200	7.87	250	9.84	250	9.84	350	13.78
Approx. Weight	Kg/Lb	7.5	16.53	7.5	15.43	9.0	19.84	15.5	34.17	26	57.32	26	57.32	36	79.37

Class 2500 Pressure Seal Bonnet

Regular and Full Port - ASME B16.34. Outside Screw & Yoke -Threaded and Socket Weld Ends

Regular Port	Size	3/8		1/2		3/4		1		1-1/4		1-1/2		2	
Full Port	Size	1/4		3/8		1/2		3/4		1		1-1/4		1-1/2	
End to End	L	mm	in	mm	in	mm	in	mm	in	mm	in	mm	in	mm	in
		120	4.72	120	4.72	140	5.51	186	7.32	232	9.13	232	9.13	279	10.98
Bore Diameter	D	8.0	0.31	9.0	0.35	12.0	0.47	15	0.59	19	0.75	27	1.06	27	1.06
Center to Top (Open)	H	295.3	11.63	295.3	11.62	346.3	13.63	389.3	15.33	430.4	16.94	430.4	16.94	478.8	18.85
Handwheel	W	150	5.91	150	5.91	180	7.09	200	7.87	250	9.84	250	9.84	350	13.78
Approx. Weight	Kg/Lb	7.5	16.53	7.5	16.53	12.0	26.46	19.5	42.99	28	61.73	28	61.73	40	88.18

Class 900/1500 Overall-end Flange, Bolted Bonnet, Structure Length-ASME B16.10

Regular Port -API 602. Outside Yoke & overall-end Flange -ASME B16.5

Regular Port	Size	1/2		3/4		1		1-1/2		2	
End to End	L	mm	in	mm	in	mm	in	mm	in	mm	in
		216	8.50	229	9.02	254	10.00	305	12.01	368	14.49
Bore Diameter	D	9.0	0.35	12.0	0.47	15.0	0.59	27.0	1.06	32.0	1.26
Center to Top (Open)	H	165.7	6.52	191.8	7.55	226.8	8.93	280.3	11.04	312.3	12.30
Handwheel	W	90	3.54	110	4.33	150	5.91	180	7.09	180	7.09
Approx. Weight	Kg/Lb	7.0	15.43	9.0	19.84	14.5	31.97	22	48.50	40	88.18

Class 800 Y Pattern Welded Bonnet

Full Port-API 602. Outside Screw & Yoke - Threaded and Socket Weld Ends

Full Port	Size	3/8		1/2		3/4		1		1-1/4		1-1/2		2	
End to End	L	mm	in	mm	in	mm	in	mm	in	mm	in	mm	in	mm	in
		80	3.15	80	3.15	90	3.54	110	4.33	125	4.92	155	6.10	180	7.09
Bore Diameter	D	9.5	0.37	12	0.47	17	0.67	23	0.91	28	1.10	36	1.42	44	1.73
Center to Top (Open)	H	170	6.69	170	6.69	200	7.87	242	9.53	276	10.87	295	11.61	327	12.87
Handwheel	W	90	3.54	90	3.54	110	4.33	150	5.91	150	5.91	150	5.91	180	7.09
Approx. Weight	Kg/Lb	2.0	4.41	2.5	5.51	3.5	7.72	5.0	11.02	6.5	14.33	8.0	17.64	12.5	27.56

Class 900-1500 Y Pattern Welded Bonnet

Full Port-API 602. Outside Screw & Yoke - Threaded and Socket Weld Ends

Full Port	Size	3/8		1/2		3/4		1		1-1/4		1-1/2		2	
End to End	L	mm	in	mm	in	mm	in	mm	in	mm	in	mm	in	mm	in
		80	3.15	90	3.54	110	4.33	125	4.92	155	6.10	180	7.09	200	7.87
Bore Diameter	D	9.5	0.37	12	0.47	15	0.59	21	0.83	27	1.06	32	1.26	38	1.50
Center to Top (Open)	H	170	6.69	200	7.87	238	9.37	272	10.71	308	12.13	326	12.83	376	14.80
Handwheel	W	90	3.54	110	4.33	150	5.91	150	5.91	180	7.09	180	7.09	200	7.87
Approx. Weight	Kg/Lb	2.8	6.17	4.0	8.82	5.0	11.02	7.5	16.53	9.0	19.84	13	28.66	18	39.68

Class 2500 Y Pattern Welded Bonnet

Full Port-ASME B16.34. Outside Screw & Yoke - Threaded and Socket Weld Ends

Full Port	Size	3/8		1/2		3/4		1		1-1/2		2	
End to End	L	mm	in	mm	in	mm	in	mm	in	mm	in	mm	in
		-	-	110	4.33	125	4.92	180	7.09	200	7.87	230	9.06
Bore Diameter	D	-	-	12	0.47	15	0.59	21	0.83	28	1.10	35	1.38
Center to Top (Open)	H	-	-	239.6	9.43	274.1	10.79	325.5	12.81	372.9	14.68	446.2	17.57
Handwheel	W	-	-	150	5.91	150	5.91	180	7.09	200	7.87	300	11.81
Approx. Weight	Kg/Lb	-	-	5.5	12.13	7.5	16.53	13.5	29.76	18.5	40.79	25	55.12

Class 900-1500 Y Pattern Pressure Seal Bonnet

Full Port-API602. Outside Screw & Yoke - Threaded and Socket Weld Ends

Full Port	Size	1/2		3/4		1		1-1/2		2	
End to End	L	mm	in	mm	in	mm	in	mm	in	mm	in
		140	5.51	140	5.51	140	5.51	178	7.01	216	8.50
Bore Diameter	D	10	0.39	15	0.59	21	0.83	32	1.26	38	1.50
Center to Top (Open)	H	350	13.78	350	13.78	350	13.78	450	17.72	450	17.72
Handwheel	W	200	7.87	200	7.87	200	7.87	250	9.84	300	11.81
Approx. Weight	Kg/Lb	9.0	19.84	9.5	20.94	11.5	25.35	16.5	36.38	30	66.14

Class 2500 Y Pattern Pressure Seal Bonnet

Full Port-ASME B16.34. Outside Screw & Yoke - Threaded and Socket Weld Ends

Full Port	Size	1/2		3/4		1		1-1/2		2	
End to End	L	mm	in	mm	in	mm	in	mm	in	mm	in
		140	5.51	178	7.01	216	8.50	216	8.50	279	10.98
Bore Diameter	D	12	0.47	15	0.59	21	0.83	28	1.10	38	1.50
Center to Top (Open)	H	380	14.96	405	15.94	430	16.93	480	18.90	520	20.47
Handwheel	W	180	7.09	200	7.87	250	9.84	350	13.78	350	13.78
Approx. Weight	Kg/Lb	10	22.05	13	28.66	15	33.07	25	55.12	42.5	93.70

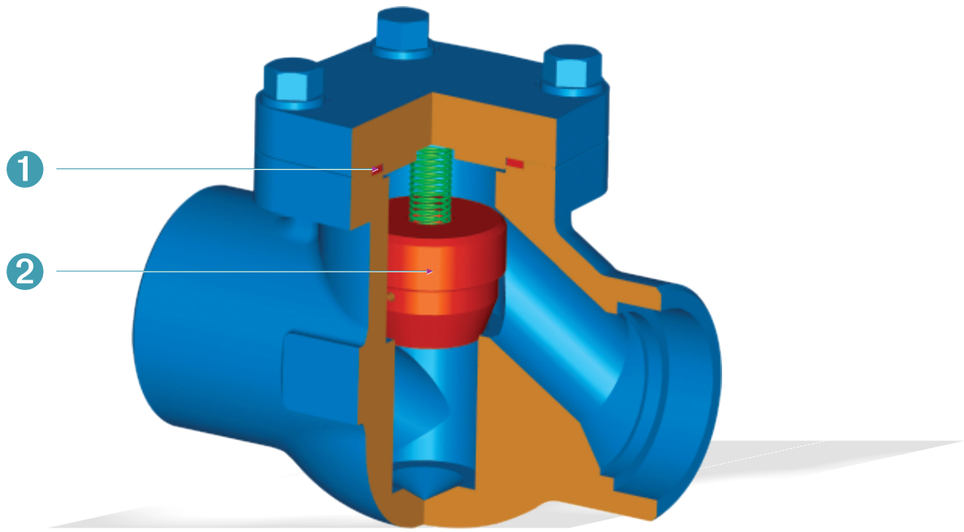

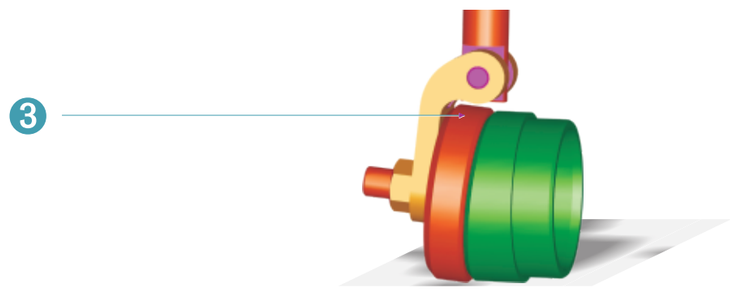

1. Recessed Body-Bonnet Joint design captures the stainless steel spiral wound gasket ensuring body/bonnet sealing integrity.

2. Body guided disc to ensure perfect alignment of disc and seat even under large flow conditions and high velocity.

3. Piston type are standard, swing disc style available are available upon request.

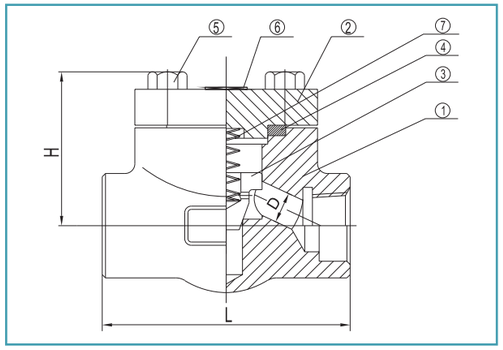

Bolted Cover

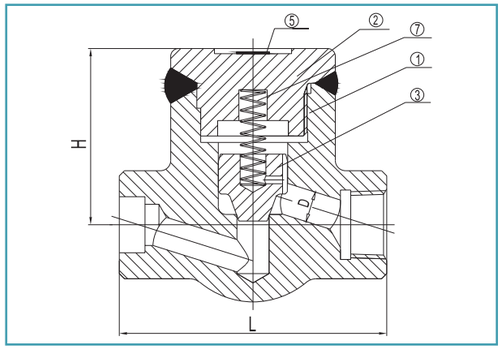

Welded Cover

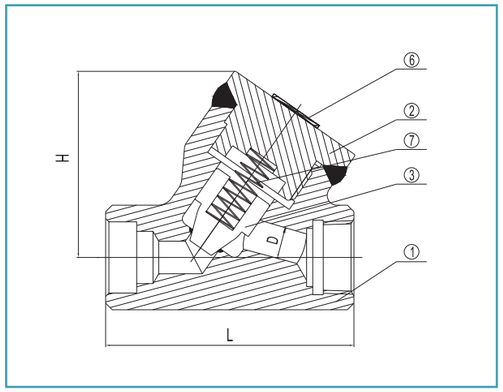

Y Pattern Welded Cover

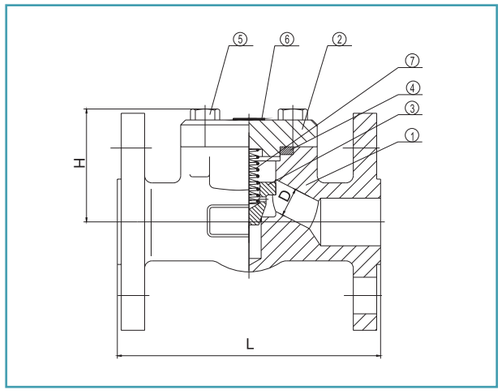

Integral Flanged Ends

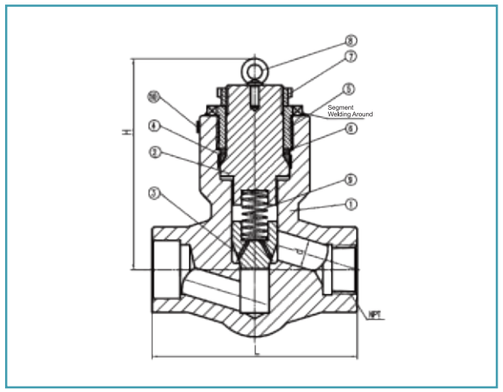

Pressure Seal Bonnet Connection

Material List

NO.	Description of Parts	Material		
		Standard	High Temperature	Stainless Steel
1	BODY	ASTM A105/STL.OVERLAY	ASTM A182-F11/F22/STL OVERLAY	ASTM A182-F304/F316/STL OVERLAY
2	BONNET	ASTM A105	ASTM A182-F11/F22	ASTM A182-F304/F316
3	DISC	ASTM A182-F6a	ASTM A182-F6a	ASTM A182-F304/F316
4	GASKET	304 SPIRAL WOUND GRAPHITE	304 SPIRAL WOUND GRAPHITE	304/316 SPIRAL WOUND GRAPHITE
5	STUD	ASTM A193-B7	ASTM A193-B16	ASTM A193-B8
6	NAME PLATE	ASTM A276 304	ASTM A276 304	ASTM A276 304
7	SPRING	ASTM A276 316	ASTM A276-316	ASTM A276-316

Class 800 Bolted Cover or Welded Cover

Regular and Full Port - API602. Outside Screw & Yoke -Threaded and Socket Weld Ends

Regular Port	Size		3/8		1/2		3/4		1		1-1/4		1-1/2		2	
Full Port	Size		1/4		3/8		1/2		3/4		1		1-1/4		1-1/2	
End to End	L		mm	in	mm	in	mm	in	mm	in	mm	in	mm	in	mm	in
			76	2.99	76	2.99	86	3.39	102	4.02	140	5.51	140	5.51	170	6.69
Bore Diameter	D		6.5	0.26	9.5	0.37	12.7	0.50	17.5	0.69	23	0.91	28.6	1.13	36.5	1.44
Center to Top (Open)	H	Bolted Bonnet	48	1.89	48	1.89	53	2.09	64	2.52	80	3.15	80	3.15	100	3.94
		Welded Bonnet	49	1.93	49	1.93	58	2.28	70	2.76	96	3.78	90	3.54	125	4.92
Approx. Weight	Kg/Lb		1	2.20	1	2.20	1.5	3.31	2	4.41	4.5	9.92	6	13.23	7.5	16.53

Class 900-1500 Bolted Cover or Welded Cover

Regular and Full Port - API602. Outside Screw & Yoke -Threaded and Socket Weld Ends

Regular Port	Size		1/2		3/4		1		1-1/4		1-1/2		2	
Full Port	Size		3/8		1/2		3/4		1		1-1/4		1-1/2	
End to End	L		mm	in	mm	in	mm	in	mm	in	mm	in	mm	in
			90	3.54	104	4.09	120	4.72	150	5.91	150	5.91	180	7.09
Bore Diameter	D		9	0.35	12	0.47	15	0.59	21	0.83	27	1.06	32	1.26
Center to Top (Open)	H	Bolted Bonnet	56	2.20	62	2.44	72	2.83	92.5	3.64	92.5	3.64	111	4.37
		Welded Bonnet	61.5	2.42	68.5	2.70	72.5	2.85	83.5	3.29	83.5	3.29	100.5	3.96
Approx. Weight	Kg/Lb		1.5	3.31	2.5	5.51	4	8.82	6	13.23	8.5	18.74	14.5	31.97

Class 900-1500 Pressure Seal Bonnet

Regular and Full Port - API602. Outside Screw & Yoke -Threaded and Socket Weld Ends

Regular Port	Size		1/2		3/4		1		1-1/4		1-1/2		2	
Full Port	Size		3/8		1/2		3/4		1		1-1/4		1-1/2	
End to End	L		mm	in	mm	in	mm	in	mm	in	mm	in	mm	in
			120	4.72	120	4.72	140	5.51	165	6.50	186	7.32	232	9.13
Bore Diameter	D		9	0.35	12	0.47	15	0.59	21	0.83	27	1.06	30	1.18
Center to Top (Open)	H		188	7.40	188	7.40	196	7.72	220	8.66	220	8.66	238	9.37
Approx. Weight	Kg/Lb		5	11.02	6.5	14.33	8	17.64	13.5	29.76	15	33.07	25	55.12

Class 2500 Welded Cover

Regular and Full Port - ASME B16.34. Outside Screw & Yoke -Threaded and Socket Weld Ends

Regular Port	Size		1/2		3/4		1		1-1/4		1-1/2		2	
Full Port	Size		3/8		1/2		3/4		1		1-1/4		1-1/2	
End to End	L		mm	in	mm	in	mm	in	mm	in	mm	in	mm	in
			120	4.72	140	5.51	186	7.32	-	-	232	9.13	279	10.98
Bore Diameter	D		9	0.35	12	0.47	15	0.59	-	-	27	1.06	27	1.06
Center to Top (Open)	H		90	3.54	100	3.94	115	4.53	-	-	140	5.51	160	6.30
Approx. Weight	Kg/Lb		3.5	7.72	5.5	12.13	10.5	23.15	-	-	18.5	40.79	25	55.12

NEWAY reserves the right to change design, materials or specifications without notice and free of obligation to furnish or install such changes on products previouly sold.

Class 2500 Pressure Seal Bonnet

Regular and Full Port - ASME B16.34. Outside Screw & Yoke -Threaded and Socket Weld Ends

Regular Port	Size		1/2		3/4		1		1-1/4		1-1/2		2	
Full Port	Size		3/8		1/2		3/4		1		1-1/4		1-1/2	
End to End	L		mm	in	mm	in	mm	in	mm	in	mm	in	mm	in
			120	4.72	140	5.51	186	7.32	-	-	232	9.13	279	10.98
Bore Diameter	D		9	0.35	12	0.47	15	0.59	-	-	27	1.06	27	1.06
Center to Top (Open)	H		172	6.77	195	7.68	214	8.43	-	-	241	9.49	260	10.24
Approx. Weight	Kg/Lb		3.5	7.72	5.5	12.13	10.5	23.15	-	-	18.5	40.79	25	55.12

Class 800 Y Pattern Welded Bonnet

Full Port - API602. Outside Screw & Yoke -Threaded and Socket Weld Ends

Full Port	Size		3/8		1/2		3/4		1		1-1/4		1-1/2		2	
End to End	L		mm	in	mm	in	mm	in	mm	in	mm	in	mm	in	mm	in
			80	3.15	80	3.15	90	3.54	110	4.33	125	4.92	155	6.10	180	7.09
Bore Diameter	D		9.5	0.37	12	0.47	17	0.67	23	0.91	28	1.10	36	1.42	44	1.73
Center to Top (Open)	H		68.5	2.70	68.5	2.70	78.5	3.09	89.5	3.52	105.5	4.15	123.5	4.86	147.5	5.81
Approx. Weight	Kg/Lb		1	2.20	1.5	3.31	2	4.41	4.5	9.92	8	17.64	8	17.64	11	24.25

Class 900-1500 Y Pattern Welded Bonnet

Full Port - API602. Outside Screw & Yoke -Threaded and Socket Weld Ends

Full Port	Size		3/8		1/2		3/4		1		1-1/4		1-1/2		2	
End to End	L		mm	in	mm	in	mm	in	mm	in	mm	in	mm	in	mm	in
			80	3.15	90	3.54	110	4.33	125	4.92	155	6.10	180	7.09	200	7.87
Bore Diameter	D		9.5	0.37	12	0.47	15	0.59	21	0.83	27	1.06	32	1.26	38	1.50
Center to Top (Open)	H		71.8	2.83	82.5	3.25	84.2	3.31	104.7	4.12	121.7	4.79	143.3	5.64	55.2	6.11
Approx. Weight	Kg/Lb		2	4.41	3	6.61	4.2	9.26	5.2	11.46	9.5	20.94	11	24.2	15	33.07

Class 150-300-600 Overall-end Flange, Bolted Bonnet, Structure Length-ASME B16.10

Regular Port - API 602. Overall-end Flange -ASME B16.5

Regular Port		Size	1/2		3/4		1		1-1/4		1-1/2		2	
			mm	in	mm	in	mm	in	mm	in	mm	in	mm	in
End to End	Class 150	L	108	4.25	117	4.61	127	5	140	5.51	165	6.50	203	7.99
	Class 300	L	152	5.98	178	7.01	203	7.99	-	-	229	9.02	267	10.51
	Class 600	L	165	6.50	190	7.48	216	8.50	-	-	241	9.49	292	11.50
Bore Diameter		D	9.50	0.37	12.7	0.50	17.5	0.69	23	0.91	28.6	1.13	36.5	1.44
Center to Top (Open)		H	50	1.97	54	2.13	68	2.68	78	3.07	78	3.07	96	3.78
Approx. Weight	Class 150	Kg/Lb	2.5	5.51	3.3	7.28	4.3	9.48	6.5	14.33	9	19.84	13	28.66
	Class 300		3.0	6.61	3.8	8.38	5.2	11.46	-	-	10.5	23.15	15	33.07
	Class 600		3.5	7.72	4.5	9.92	6.0	13.23	-	-	12	26.46	17	37.48

Class 900-1500 Overall-end Flange, Bolted Bonnet, Structure Length-ASME B16.10

Regular Port - API 602. Overall-end Flange -ASME B16.5

Regular Port	Size		1/2		3/4		1		1-1/2		2	
End to End	L		mm	in	mm	in	mm	in	mm	in	mm	in
			216	8.50	229	9.02	254	10	305	12.01	368	14.49
Bore Diameter	D		9	0.35	12	0.47	15	0.59	27	1.06	32	1.26
Center to Top (Open)	H		53	2.09	60	2.36	70	2.76	86	3.39	105	4.13
Approx. Weight	Kg/Lb		6	13.23	7.5	16.53	12	26.46	21	46.30	32.5	71.65

NEWAY reserves the right to change design, materials or specifications without notice and free of obligation to furnish or install such changes on products previouly sold.

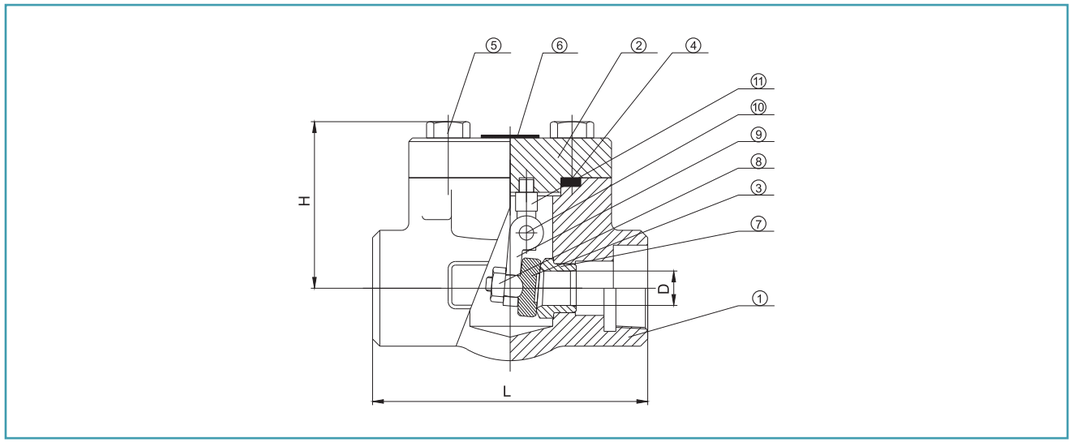

Bolted Cover

Material List

NO.	Description of Parts	Material		
		Standard	High Temperature	Stainless Steel
1	BODY	ASTMA105	ASTM A182-F11/F22	ASTMA182-F304/F316
2	BONNET	ASTMA105	ASTM A182-F11/F22	ASTM A182-F304/F316
3	DISC	ASTMA182-F6a	ASTM A182-F6a	ASTM A182-F304/F316
4	GASKET	304SS/SPIRAL WOUND GRAPHITE	304SS/SPIRAL WOUND GRAPHITE	304/316SS/SPIRAL WOUND GRAPHITE
5	STUD	ASTM A193-B7	ASTM A193-B16	ASTM A193-B8
6	NAME PLATE	ASTM A240 304	ASTM A240-304	ASTM A240-304
7	SEAT RING	ASTM A276-410/STLOVERLAY	ASTM A276-410/STLOVERLAY	ASTM A182-F304/F316/STL OVERLAY
8	DISC NUT	ASTM A276-304	ASTM A276-304	ASTM A276-304/316
9	HINGE	ASTM A216-WCB	ASTM A217-WC6/WC9	ASTM A351-CF8/CF8M
10	HINGE PIN	ASTM A276-410	ASTM A276-410	ASTM A276-F304/316
11	SUPPORT	ASTM A105	ASTM A182-F11/F22	ASTM A182-F304/F316

Class 800 Bolted Bonnet

Regular and Full Port-API602. Threaded and Socket Weld Ends

Regular Port	Size	1/2		3/4		1		1-1/4		1-1/2		2	
Full Port	Size	3/8		1/2		3/4		1		1-1/4		1-1/2	
End to End	L	mm	in	mm	in	mm	in	mm	in	mm	in	mm	in
		76	2.99	86	3.39	102	4.02	118	4.65	118	4.65	132	5.20
Bore Diameter	D	9.5	0.37	12.7	0.50	17.5	0.69	23.8	0.94	28.6	1.13	36.5	1.44
Center to Top (Open)	H	48.5	1.91	52	2.05	67	2.64	88	3.46	88	3.46	101	3.98
Approx. Weight	Kg/Lb	1.5	3.31	2.3	5.07	2.8	6.17	4.0	8.82	5.7	12.57	7.7	16.98

NEWAY reserves the right to change design, materials or specifications without notice and free of obligation to furnish or install such changes on products previouly sold.

Class 900-1500 Bolted Bonnet

Regular and Full Port-API602. Threaded and Socket Weld Ends

Regular Port	Size	1/2		3/4		1		1-1/4		1-1/2		2	
Full Port	Size	3/8		1/2		3/4		1		1-1/4		1-1/2	
End to End	L	mm	in	mm	in	mm	in	mm	in	mm	in	mm	in
		90	3.54	104	4.09	120	4.72	130	5.12	130	5.12	150	5.91
Bore Diameter	D	9.5	0.37	12.7	0.50	16	0.63	27	1.06	27	1.06	35	1.38
Center to Top (Open)	H	57.5	2.26	66	2.60	78.5	3.09	106	4.17	106	4.17	129	5.08
Approx. Weight	Kg/Lb	1.8	3.97	2.5	5.51	3.8	8.38	6.5	14.33	6.5	14.33	10	22.05

Class 150-300-600 Overall-end Flange, Bolted Bonnet, Structure Length-ASME B16.10

Regular Port-API 602. Overall-end Flange -ASME B16.5

Regular Port		Size	1/2		3/4		1		1-1/2		2	
End to End			mm	in	mm	in	mm	in	mm	in	mm	in
	Class 150	L	108	4.25	117	4.61	127	5.00	165	6.50	203	7.99
	Class 300	L	152	5.98	178	7.01	216	8.50	241	9.49	267	10.51
	Class 600	L	165	6.50	190	7.48	216	8.50	241	9.49	292	11.50
Bore Diameter		D	9.50	0.37	12.7	0.50	17.5	0.69	28.6	1.13	36.5	1.44
Center to Top (Open)		H	48.5	1.91	52	2.05	67	2.64	88	3.46	101	3.98
Approx. Weight	Class 150		2.5	5.51	3.3	7.28	4.3	9.48	9.0	19.84	13	28.66
	Class 300		3.0	6.61	3.8	8.38	5.2	11.46	10.5	23.15	15	33.07
	Class 600		3.5	7.72	4.5	9.92	6	13.23	12	26.46	17	37.48

Class 2500 Welded Bonnet

Regular and Full Port-ASME B16.34. Outside Screw & Yoke-Threaded and Socket Weld Ends

Regular Port	Size	1/2		3/4		1		1-1/2		2	
Full Port	Size	3/8		1/2		3/4		1-1/4		1-1/2	
End to End	L	mm	in	mm	in	mm	in	mm	in	mm	in
		178	7.01	178	7.01	186	7.32	232	9.13	279	10.98
Bore Diameter	D	9.0	0.35	12.0	0.47	15	0.59	27	1.06	34.5	1.36
Center to Top (Open)	H	81	3.19	81	3.19	94	3.70	158	6.22	180	7.09
Approx. Weight	Kg/Lb	4.5	9.92	7.5	16.53	8.0	17.64	15	33.07	19.5	42.99

NEWAY reserves the right to change design, materials or specifications without notice and free of obligation to furnish or install such changes on products previouly sold.

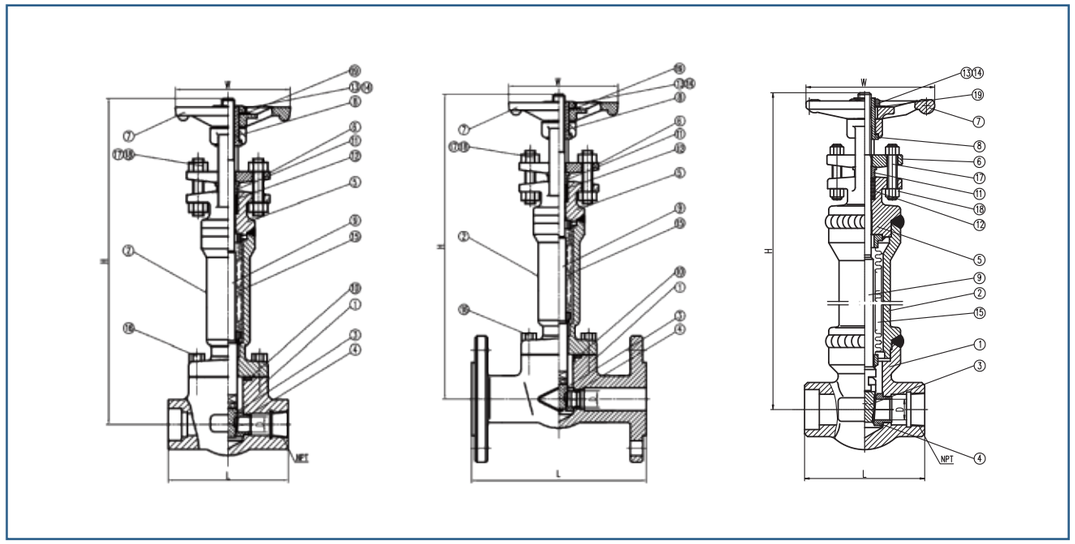

Bolted Bonnet　　Overall-end Flange　　Welded Bonnet

Material List

NO.	Description of Parts	Material		
		Standard	High Temperature	Stainless Steel
1	BODY	ASTM A105N	ASTM A182 F11/F22	ASTM A182 F304/F316
2	BONNET	ASTMA105N	ASTM A182 F11/F22	ASTM A182 F304/F316
3	WEDGE	ASTM A182 F6a	ASTM A182 F6a	ASTM A182 F304/F316
4	SEAT RING	ASTM A276-410/STL.OVERLAY	ASTM A276-410/STL.OVERLAY	ASTM A182 F304/F316/STL.OVERLAY
5	YOKE	ASTM A105N	ASTM A182 F11/F22	ASTM A182 F304/F316
6	GLAND FLANGE	ASTM A216 WCB	ASTM A216 WCB	ASTM A351 CF8
7	HANDWHEEL	DUCTILE IRON	DUCTILE IRON	DUCTILE IRON
8	STEM NUT	ASTM A276 420	ASTM A276 420	ASTM A276 420
9	STEM	ASTM A182 F6a	ASTM A182 F6a	ASTM A182 F304/F316
10	GASKET	304SS/SPIRAL WOUND GRAPHITE	304SS/SPIRAL WOUND GRAPHITE	304/316SS/SPIRAL WOUND GRAPHITE
11	GLAND	ASTM A276 420	ASTM A276 420	ASTM A276 304/316
12	PACKING	GRAPHITE	GRAPHITE	DUCTILE IRON
13	HANDWHEEL NUT	CARBON STEEL	CARBON STEEL	ASTM A276 304
14	WASHER	ASTM A276 304	ASTM A276 304	ASTIM A276 304
15	BELLOWS	ASTM A276 316Ti	ASTM A276 316Ti	ASTM A276 316Ti
16	STUD	ASTM A193 B7	ASTM A193 B16	ASTM A193 B8
17	STUD	ASTM A193 B8	ASTM A193 B8	ASTM A193 B8
18	NUT	ASTM A194 8	ASTM A194 8	ASTMA194 8
19	NAME PLATE	ASTM A276 304	ASTM A276 304	ASTM A276 304

Class 800 Bolted Bonnet or Welded Bonnet

Regular and Full Port-AP1602. Outside Screw & Yoke-Threaded and Socket Weld Ends

Regular Port	Size		1/2		3/4		1		1-1/4		1-1/2		2	
Full Port	Size		3/8		1/2		3/4		1		1-1/4		1-1/2	
End to End	L		mm	in	mm	in	mm	in	mm	in	mm	in	mm	in
			76	2.99	86	3.39	102	4.02	118	4.65	118	4.65	132	5.20
Bore Diameter	D		9.5	0.37	12.7	0.50	17.5	0.69	23.8	0.94	28.6	1.13	36.5	1.44
Center to Top (Open)	H	Bolted Bonnet	329.2	12.96	353.7	13.93	425.5	16.75	577.4	22.73	577.4	22.73	712.1	28.04
		Welded Bonnet	289.2	11.39	319.8	12.59	372.7	14.67	533.3	21.00	533.3	21.00	700	27.56
Handwheel	W		90	3.54	90	3.54	110	4.33	150	5.91	150	5.91	150	5.91
Approx. Weight	Kg/Lb		3.5	7.72	4.0	8.82	5.5	12.13	8.5	18.74	8.5	18.74	16	35.27

Class 900/1500 Welded Bonnet

Regular and Full Port-AP1602. Outside Screw & Yoke-Threaded and Socket Weld Ends

Regular Port	Size	1/2		3/4		1		1-1/4		1-1/2		2	
Full Port	Size	3/8		1/2		3/4		1		1-1/4		1-1/2	
End to End	L	mm	in	mm	in	mm	in	mm	in	mm	in	mm	in
		90	3.54	104	4.09	120	4.72	130	5.12	130	5.12	150	5.91
Bore Diameter	D	9.5	0.37	12.7	0.50	16	0.63	22.5	0.89	27	1.06	35	1.38
Center to Top (Open)	H	300	11.81	320	12.60	380	14.96	530	20.87	530	20.87	580	22.83
Handwheel	W	90	3.54	110	4.33	150	5.91	150	5.91	150	5.91	180	7.09
Approx. Weight	Kg/Lb	5	11.02	7.5	16.53	11.5	25.35	19	41.89	19	41.89	30	66.14

Class 150-300-600 Overall-end Flange, Bolted Bonnet, Structure Length-ASME B16.10

Regular Port-API 602. Outside Yoke & Overall-end Flange-ASME B16.5

Regular Port	Size		1/2		3/4		1		1-1/2		2	
			mm	in	mm	in	mm	in	mm	in	mm	in
End to End	Class 150	L	108	4.25	117	4.61	127	5	165	6.50	178	7.01
	Class 300	L	140	5.51	152	5.98	165	6.50	190	7.48	216	8.50
	Class 600	L	165	6.50	190	7.48	216	8.50	241	9.49	292	11.50
Bore Diameter		D	9.50	0.37	12.7	0.50	17.5	0.69	28.6	1.13	36.5	1.44
Center to Top (Open)		H	145.5	5.73	151.8	5.98	179.7	7.07	247	9.72	268.7	10.58
Handwheel		W	90	3.54	90	3.54	110	4.33	150	5.91	150	5.91
Approx. Weight	Class 150		3	6.61	3.8	8.38	4.8	10.58	10	22.05	15	33.07
	Class 300	Kg/Lb	3.4	7.50	4.5	9.92	5.7	12.57	11.5	25.35	17	37.48
	Class 600		4	8.82	5.2	11.46	6.6	14.55	12.7	28.00	18	39.68

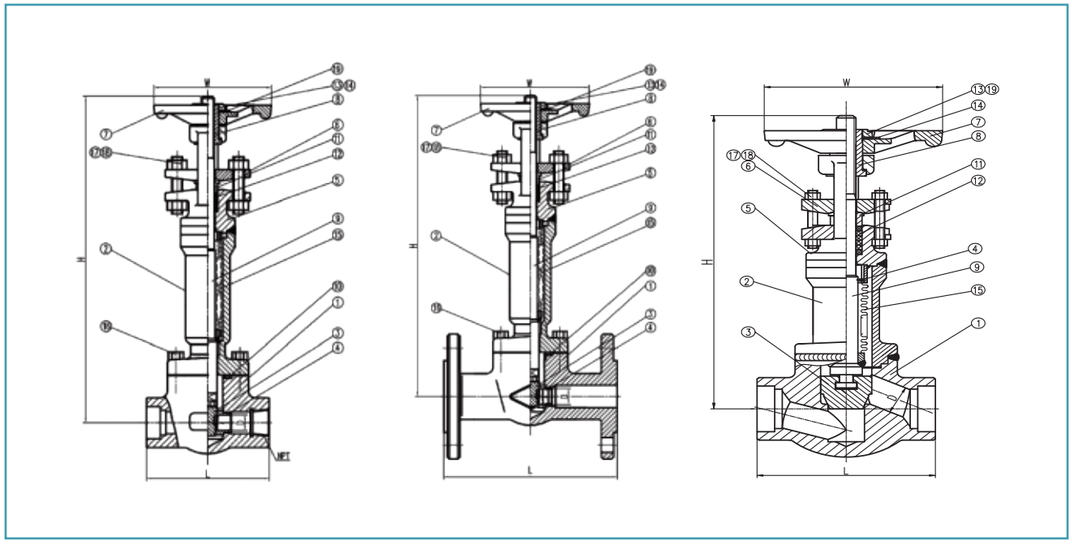

Bolted Bonnet　　Overall-end Flange　　Welded Bonnet

Material List

NO.	Description of Parts	Material		
		Standard	High Temperature	Stainless Steel
1	BODY	ASTM A105NSTL.OVERLAY	ASTMA182 F11/F22/STLOVERLAY	ASTM A182 F304/F316/STL.OVERLAY
2	BONNET	ASTM A105N	ASTM A182 F11/F22	ASTM A182 F304/F316
3	DISC	ASTM A182 F6a	ASTM A182 F6a	ASTM A182 F304/F316
4	PIN	ASTM A276 304	ASTM A276 304	ASTM A276 304
5	YOKE	ASTMA105N	ASTM A182 F11/F22	ASTM A182 F304/F316
6	GLAND FLANGE	ASTM A216 WCB	ASTM A216 WCB	ASTM A351 CF8
7	HANDWHEEL	DUCTILE IRON	DUCTILE IRON	DUCTILE IRON
8	STEM NUT	ASTM A276 420	ASTM A276 420	ASTM A276 420
9	STEM	ASTM A182 F6a	ASTM A182 F6a	ASTM A182 F304/F316
10	GASKET	304SS/SPIRAL WOUND GRAPHITE	304SS/SPIRAL WOUND GRAPHITE	304/316SS/SPIRAL WOUND GRAPHITE
11	GLAND	ASTM A276 420	ASTM A276 420	ASTM A276 304/316
12	PACKING	GRAPHITE	GRAPHITE	DUCTILE IRON
13	HANDWHEEL NUT	CARBON STEEL	CARBON STEEL	ASTM A276 304
14	WASHER	ASTM A276 304	ASTM A276 304	ASTM A276 304
15	BELLOWS	ASTM A276 316Ti	ASTM A276 316Ti	ASTM A276 316Ti
16	STUD	ASTM A193 B7	ASTM A193 B16	ASTM A193 B8
17	STUD	ASTM A193 B8	ASTM A193 B8	ASTMA193 B8
18	NUT	ASTM A194 8	ASTM A194 8	ASTM A194 8
19	NAME PLATE	ASTM A276 304	ASTM A276 304	ASTM A276 304

Class 800 Bolted Bonnet or Welded Bonnet

Regular and Full Port-AP1602. Outside Screw & Yoke-Threaded and Socket Weld Ends

Regular Port	Size		1/2		3/4		1		1-1/4		1-1/2		2	
Full Port	Size		3/8		1/2		3/4		1		1-1/4		1-1/2	
End to End	L		mm	in	mm	in	mm	in	mm	in	mm	in	mm	in
			76	2.99	86	3.39	102	3.39	140	5.51	140	5.51	170	6.69
Bore Diameter	D		9.5	0.37	12.7	0.50	17.5	0.50	23	0.91	28.6	1.13	36.5	1.44
Center to Top (Open)	H	Bolted Bonnet	356.1	14.02	363.5	14.31	416.3	14.31	506.3	19.93	506.3	19.93	599.2	23.59
		Welded Bonnet	311.7	12.27	353.5	13.92	363.8	13.92	464.8	18.30	452.3	17.81	563.8	22.20
Handwheel	W		110	4.33	110	4.33	110	4.33	150	5.91	150	5.91	180	7.09
Approx. Weight	Kg/Lb		3.5	7.72	4.5	9.92	5.5	9.92	11	24.25	11	24.25	17.5	38.58

Class 900/1500 Welded Bonnet

Regular and Full Port-AP1602. Outside Screw & Yoke-Threaded and Socket Weld Ends

Regular Port	Size	1/2		3/4		1		1-1/4		1-1/2		2	
Full Port	Size	3/8		1/2		3/4		1		1-1/4		1-1/2	
End to End	L	mm	in	mm	in	mm	in	mm	in	mm	in	mm	in
		90	3.54	104	4.09	120	4.72	150	5.91	150	5.91	180	7.09
Bore Diameter	D	9.0	0.35	12.0	0.47	15.0	0.59	27	1.06	27	1.06	32	1.26
Center to Top (Open)	H	356.7	14.04	434.8	17.12	482.7	19.00	587.8	23.14	587.8	23.14	630	24.80
Handwheel	W	90	3.54	110	4.33	150	5.91	180	7.09	180	7.09	250	9.84
Approx. Weight	Kg/Lb	5.5	12.13	7.5	16.53	11.5	25.35	19	41.89	19	41.89	32	70.55

Class 150-300-600 Overall-end Flange, Bolted Bonnet, Structure Length-ASME B16.10

Regular Port-API 602. Outside Yoke & Overall-end Flange-ASME B16.5

Regular Port	Size		1/2		3/4		1		1-1/2		2	
			mm	in	mm	in	mm	in	mm	in	mm	in
End to End	Class 150	L	108	4.25	117	4.61	127	5.00	165	6.50	203	7.99
	Class 300	L	152	5.98	178	7.01	203	7.99	229	9.02	267	10.51
	Class 600	L	165	6.50	190	7.48	216	8.50	241	9.49	292	11.50
Bore Diameter		D	9.50	0.37	12.7	0.50	17.5	0.69	28.6	1.13	36.5	1.44
Center to Top (Open)		H	356.1	14.02	363.5	14.31	416.3	16.39	506.3	19.93	599.2	23.59
Handwheel		W	110	4.33	110	4.33	110	4.33	150	5.91	180	7.09
Approx. Weight	Class 150		5.5	12.13	6.0	13.23	8.5	18.74	14	30.86	21.5	47.40
	Class 300	Kg/Lb	6.0	13.23	7.0	15.43	10.5	23.15	17	37.48	25	55.12
	Class 600		6.5	14.33	7.5	16.53	11	24.25	18.5	40.79	26.5	58.42

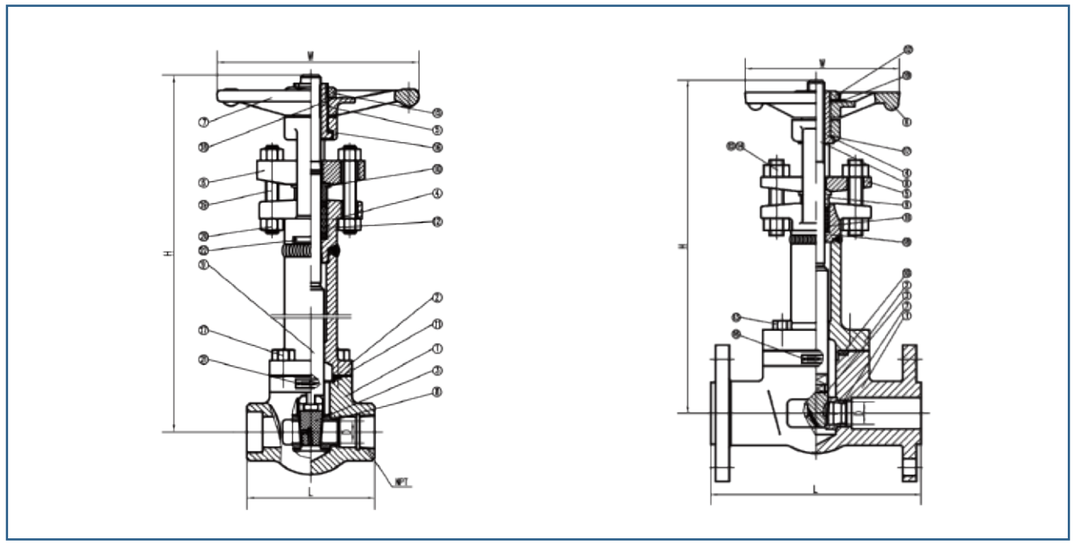

Bolted Bonnet

Overall-end Flange

Material List

NO.	Description of Parts	Material
		Stainless Steel
1	BODY	ASTM A182 F304/ F316
2	BONNET	ASTM A182 F304 /F316
3	BODY	ASTM A182 F304/ F316/ STL.OVERLAY
4	SEAT RING	ASTM A182 F304/F316/STL.OVERLAY
5	YOKE	ASTM A182 F304/F316/STL.OVERLAY
6	GLAND FLANGE	ASTM A351 CF8
7	HANDWHEEL	DUCTILE IRON
8	STEM NUT	BRONZE
9	STEM	ASTM A182 F304/F316
10	GASKET	304 /316SS /SPIRAL WOUND GRAPHITE
11	GLAND	ASTM A276 304 /316
12	PACKING	DUCTILE IRON
13	HANDWHEEL NUT	ASTM A276 304
14	WASHER	ASTM A276 304
15	WASHER	ASTM A276 304
16	BOLT	ASTM A320 B8 CL2
17	STUD	ASTM A193 B8
18	NUT	ASTM A194 8
19	NAME PLATE	ASTM A276 304
20	DIRECTION SIGN	ASTM A276 304

Class 800 Bolted Bonnet

Regular and Full Port-AP1602. Outside Screw & Yoke-Threaded and Socket Weld Ends

Regular Port	Size	1/2		3/4		1		1-1/4		1-1/2		2	
Full Port	Size	3/8		1/2		3/4		1		1-1/4		1-1/2	
End to End	L	mm	in	mm	in	mm	in	mm	in	mm	in	mm	in
		76	2.99	86	3.39	102	4.02	118	4.65	118	4.65	132	5.20
Bore Diameter	D	9.5	0.37	12.7	0.50	17.5	0.69	23.8	0.94	28.6	1.13	36.5	1.44
Center to Top (Open)	H	403	15.87	428	16.85	470.5	18.52	499.3	19.66	503.4	19.82	549.6	21.64
Handwheel	W	90	3.54	110	4.33	150	5.91	150	5.91	150	5.91	180	7.09
Approx. Weight	Kg/Lb	3	6.61	3.7	8.16	5.3	11.68	8.5	18.74	8.5	18.74	10.8	23.81

Class 150-300-600 Overall-end Flange, Bolted Bonnet, Structure Length-ASME B16.10

Regular Port-API 602. Outside Yoke & Overall-end Flange-ASME B16.5

Regular Port	Size		1/2		3/4		1		1-1/2		2	
End to End			mm	in	mm	in	mm	in	mm	in	mm	in
	Class 150	L	108	4.25	117	4.61	127	5	165	6.50	178	7.01
	Class 300	L	140	5.51	152	5.98	165	6.50	190	7.48	216	8.50
	Class 600	L	165	6.50	190	7.48	216	8.50	241	9.49	292	11.50
Bore Diameter		D	9.50	0.37	12.7	0.50	17.5	0.69	28.6	1.13	36.5	1.44
Center to Top (Open)		H	403	15.87	428	16.85	470.5	18.52	503.4	19.82	549.6	21.64
Handwheel		W	90	3.54	110	4.33	150	5.91	150	5.91	180	7.09
Approx. Weight	Class 150		4.5	9.92	5.5	12.13	7	15.43	13	28.66	18.5	40.79
	Class 300	Kg/Lb	5	11.02	6.2	13.67	8	17.64	12.5	27.56	20.5	45.19
	Class 600		5.6	12.35	7	15.43	9	19.84	15.5	34.17	21.5	47.40

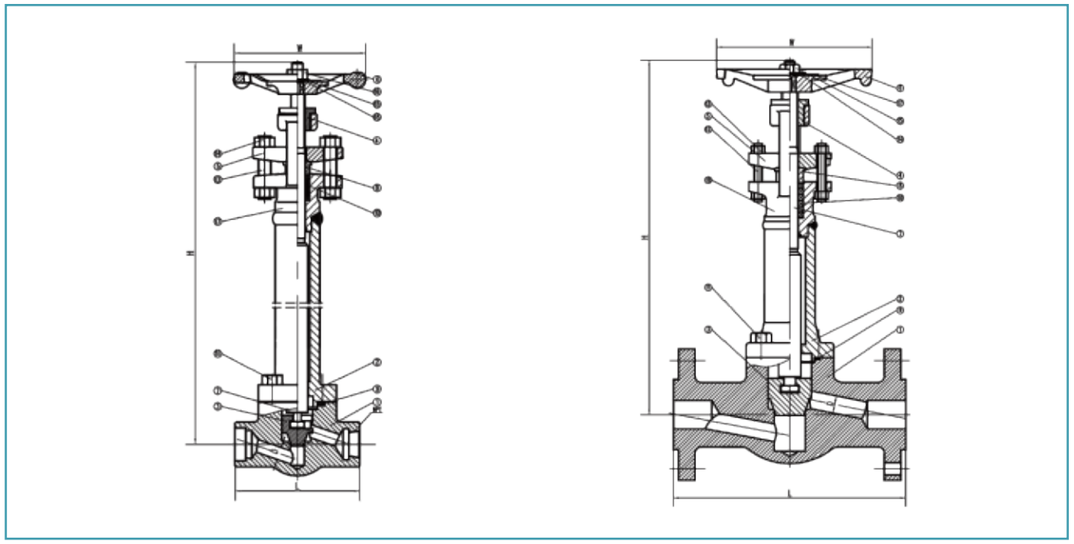

Bolted Bonnet　　Overall-end Flange

Material List

NO.	Description of Parts	Material
		Stainless Steel
1	BODY	ASTM A182 F304 /F316/STL.OVERLAY
2	BONNET	ASTM A182 F304 /F316
3	DISC	ASTM A182 F304 /F316/STL.OVERLAY
4	STEM NUT	BRONZE
5	YOKE	ASTM A182 F304 /F316/STL.OVERLAY
6	GLAND FLANGE	ASTM A351 CF8
7	HANDWHEEL	DUCTILE IRON
8	GLAND	ASTM A276 304/316
9	STEM	ASTM A182 F304 /F316
10	GASKET	304 /316SS / SPIRAL WOUND GRAPHITE
11	BOLT	ASTM A320 B8 CL2
12	PACKING	DUCTILE IRON
13	HANDWHEEL NUT	ASTM A276 304
14	WASHER	ASTM A276 304
15	STUD	ASTM A193 B8
16	NUT	ASTM A194 8
17	NAME PLATE	ASTM A276 304
18	SCREW	ISO 3506 A1-50
19	DIRECTION SIGN	ASTM A276 304

Class 800 Bolted Bonnet

Regular and Full Port-AP1602. Outside Screw & Yoke-Threaded and Socket Weld Ends

Regular Port	Size	1/2		3/4		1		1-1/4		1-1/2		2	
Full Port	Size	3/8		1/2		3/4		1		1-1/4		1-1/2	
End to End	L	mm	in	mm	in	mm	in	mm	in	mm	in	mm	in
		76	2.99	86	3.39	102	4.02	140	5.51	140	5.51	170	6.69
Bore Diameter	D	9.5	0.37	12.7	0.50	17.5	0.69	23	0.91	28.6	1.13	36.5	1.44
Center to Top (Open)	H	394.3	15.52	16.7	16.41	470.3	18.52	91.8	19.36	537.8	21.17	569.8	22.43
Handwheel	W	90	3.54	110	4.33	150	5.91	150	5.91	180	7.09	180	7.09
Approx. Weight	Kg/Lb	3	6.61	3.5	7.72	6	13.23	9	19.84	10.5	23.15	15.5	34.17

Class 150-300-600 Overall-end Flange, Bolted Bonnet, Structure Length-ASME B16.10

Regular Port-API 602. Outside Yoke & Overall-end Flange-ASME B16.5

Regular Port	Size		1/2		3/4		1		1-1/2		2	
			mm	in	mm	in	mm	in	mm	in	mm	in
End to End	Class 150	L	108	4.25	117	4.61	127	5	165	6.50	203	7.99
	Class 300	L	152	5.98	178	7.01	203	7.99	229	9.02	267	10.51
	Class 600	L	165	6.50	190	7.48	216	8.50	241	9.49	292	11.50
Bore Diameter		D	9.50	0.37	12.7	0.50	17.5	0.69	28.6	1.13	36.5	1.44
Center to Top (Open)		H	394.3	15.52	416.7	16.41	470.3	18.52	537.8	21.17	569.8	22.43
Handwheel		W	90	3.54	110	4.33	150	5.91	180	7.09	180	7.09
Approx. Weight	Class 150		5	11.02	6	13.23	7.5	16.53	15	33.07	20	44.09
	Class 300	Kg/Lb	5.6	12.35	7.5	16.53	8.3	18.30	16.5	36.38	22	48.50
	Class 600		6.1	13.45	7.8	17.20	9.1	20.06	18	39.68	24	52.91

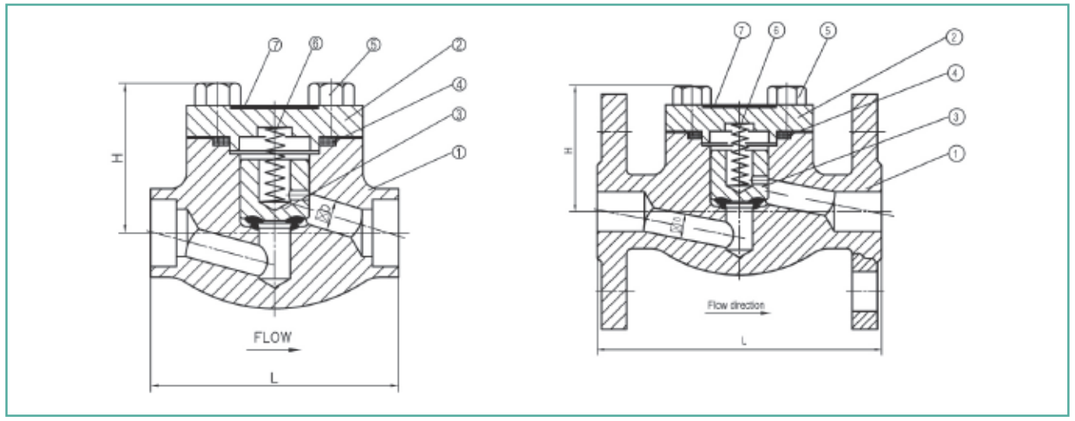

Material List

NO.	Description of Parts	Material
		Stainless Steel
1	BODY	ASTM A182 F304/F316/STL.OVERLAY
2	BONNET	ASTM A182 F304 1 F316
3	DISC	ASTM A182 F304/ F316/STLOVERLAY
4	GASKET	304/316SS /SPIRAL WOUND GRAPHITE
5	BOLT	ASTM A320 B8 CL2I
6	SPRING	NCONEL X750
7	NAME PLATE	ASTM A276 304

Class 800 Bolted Bonnet

Regular and Full Port-AP1602. Outside Screw & Yoke-Threaded and Socket Weld Ends

Regular Port	Size	1/2		3/4		1		1-1/4		1-1/2		2	
Full Port	Size	3/8		1/2		3/4		1		1-1/4		1-1/2	
End to End	L	mm	in	mm	in	mm	in	mm	in	mm	in	mm	in
		76	2.99	86	3.39	102	4.02	140	5.51	140	5.51	170	6.69
Bore Diameter	D	9.5	0.37	12.7	0.50	17.5	0.69	23	0.91	28.6	1.13	36.5	1.44
Center to Top (Open)	H	48	1.89	53	2.09	64	2.52	80	3.15	80	3.15	100	3.94
Approx. Weight	Kg/Lb	1	2.20	1.5	3.31	2	4.41	4.5	9.92	6	13.23	7.5	16.53

Class 150-300-600 Overall-end Flange, Bolted Bonnet, Structure Length-ASME B16.10

Regular Port-API 602. Outside Yoke & Overall-end Flange-ASME B16.5

Regular Port	Size		1/2		3/4		1		1-1/2		2	
End to End			mm	in	mm	in	mm	in	mm	in	mm	in
	Class 150	L	108	4.25	117	4.61	127	5	165	6.50	203	7.99
	Class 300	L	152	5.98	178	7.01	203	7.99	229	9.02	267	10.51
	Class 600	L	165	6.50	190	7.48	216	8.50	241	9.49	292	11.50
Bore Diameter		D	9.50	0.37	12.7	0.50	17.5	0.69	28.6	1.13	36.5	1.44
Center to Top (Open)		H	50	1.97	54	2.13	68	2.68	78	3.07	96	3.78
Approx. Weight	Class 150		2.5	5.51	3.3	7.28	4.3	9.48	9	19.84	13	28.66
	Class 300	Kg/Lb	3	6.61	3.8	8.38	5.2	11.46	10.5	23.15	15	33.07
	Class 600		3.5	7.72	4.5	9.92	6	13.23	12	26.46	17	37.48

Welded Bonnet

Full penetration welding-welded bonnet is the standard design for Neway welded bonnet valves.

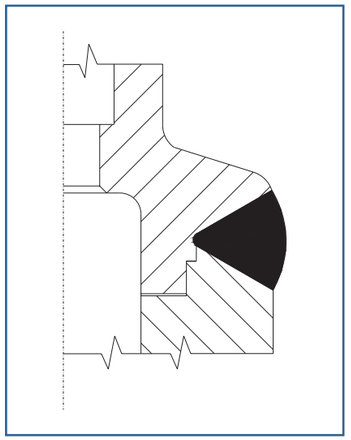

Fig.1

Gland Bolt

Neway forged steel gate and globe valves are provided with stud and nuts gland assembly (see Fig 2); eyebolts style are optional (see Fig 3).

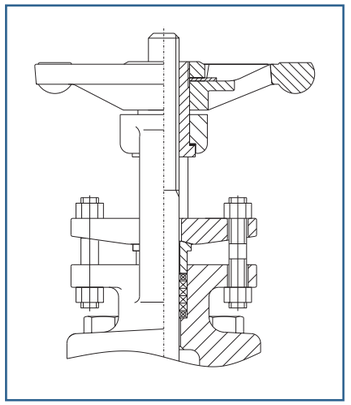

Fig.2

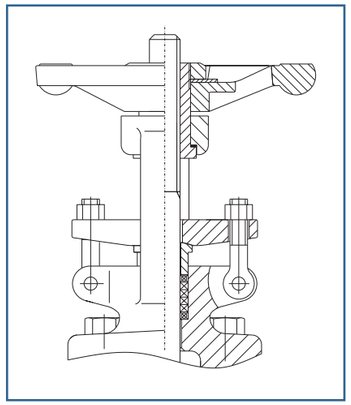

Fig.3

Bolted Bonnet

RTJ bonnet joint is the standard design for ANSI Class 1500 & 2500 valves (see Fig 4). Male to female bonnet joint is optional for ANSI Class 1500 (see Fig 5).

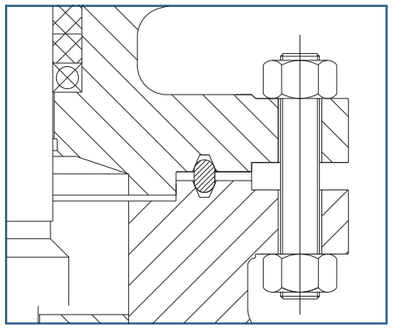

Fig.4

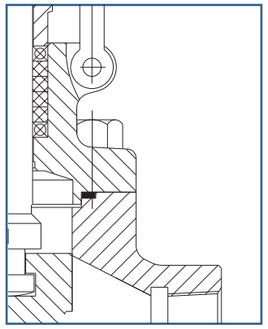

Fig.5

Neway Factory

Neway Head Office

Covers area: 2,295 sqm

Office area: 6,885 sqm

Founded in 2014

Neway Manufacturing Base

Main Products: Ball Valve, Gate Valve, Globe Valve, Check Valve, Forged Steel Valve, Butterfly Valve

Covers area: 230,000 sqm

Work shop: 140,061 sqm

Expanded in 2013

Neway Foundry (Suzhou)

Main products: Sand Casting

Covers area: 112,500 sqm

Office area: 134,000 sqm

Founded in 2008

Neway Foundry (Dafeng)

Main products: Lost wax investment casting

Covers area: 46,000 sqm

Office area: 12,000 sqm

Founded in 2004

Neway Foundry (Dafeng)

Main products: Lost wax investment casting

Covers area: 40,000 sqm

Office area: 20,000 sqm

Founded in 2008

Product Warranty

Seller will replace without charge or refund the purchase price of products provided by Seller which prove to be defective in material or workmanship, provided in each case that the product is properly installed and is used in the service for which Seller recommends it and that written claim, specifying the alleged defect, is presented to the Seller within 18 months from the date of shipment or 12 months after installation, whichever occurs first. Seller shall in no event bear any labor, equipment, engineering or other costs incurred in connection with repair of replacement. The warranty stated in this paragraph is in lieu of all other warranties, either expressed or implied. With respect to warranties, this paragraph states Buyer's exclusive remedy and seller's exclusive liability.