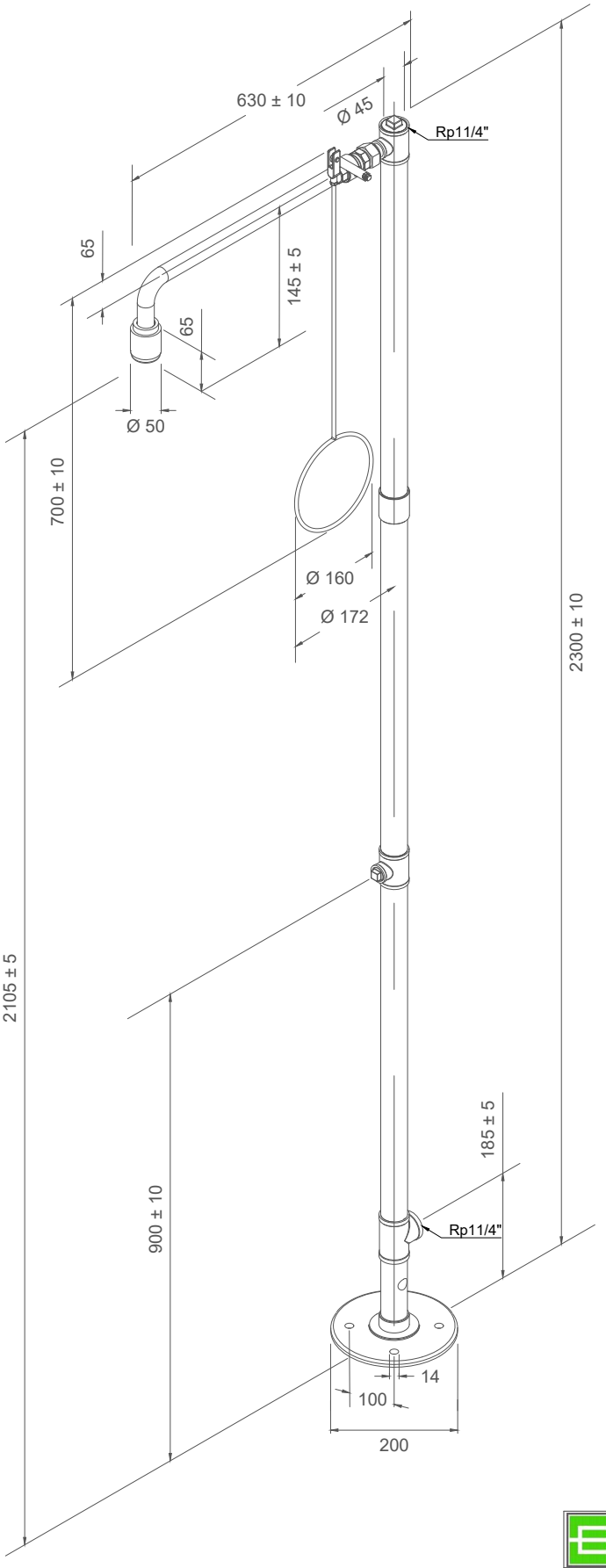

	Article:	REV / DATE:
B-SAFETY PROFESSIONAL SAFETY SOLUTIONS	BR830095	14.11.2023
PremiumLine Körper-Notdusche (ohne Augendusche), für Bodenmontage. Wasseranschluss 1 1/4-Zoll-IG.	PremiumLine body safety shower (without eye shower), floor mounted. Water inlet 1 1/4" female	