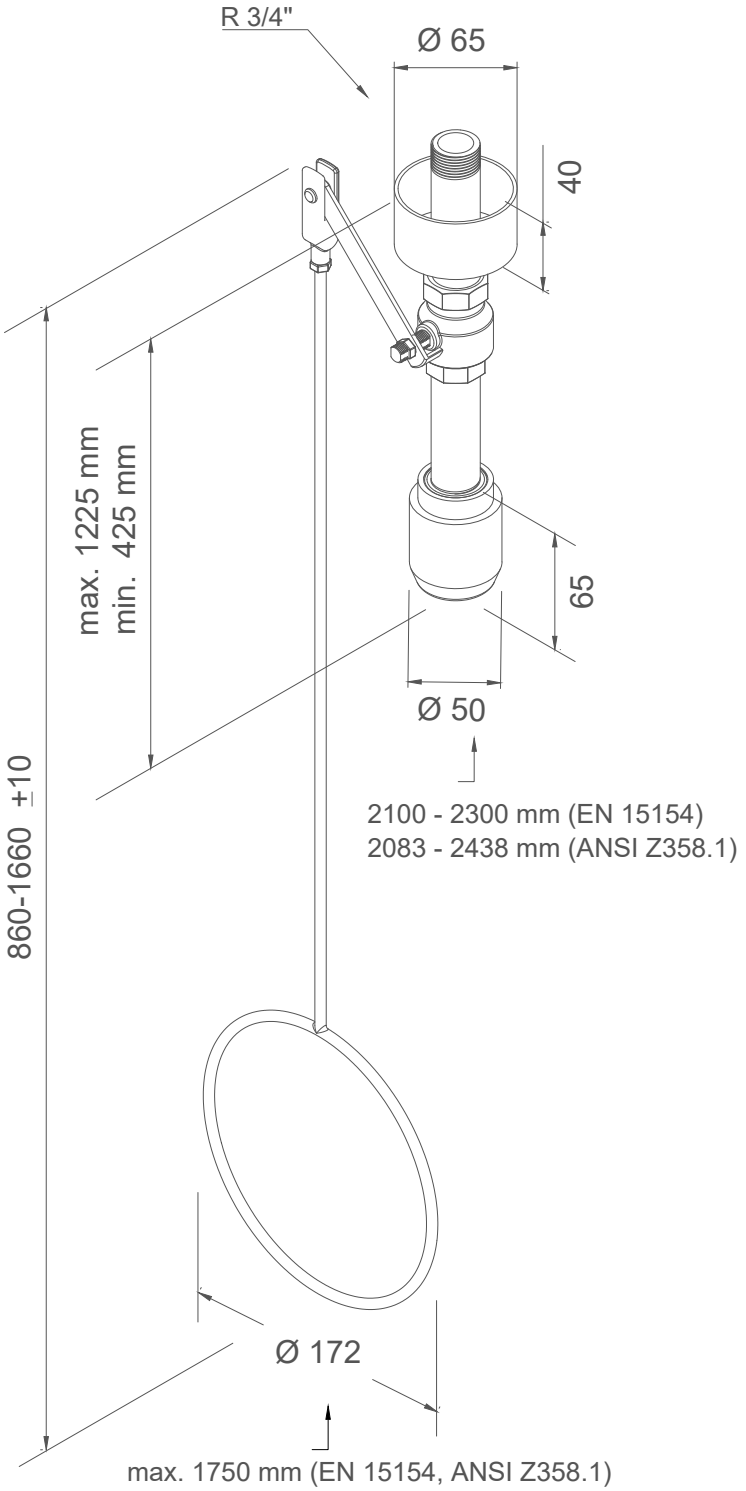

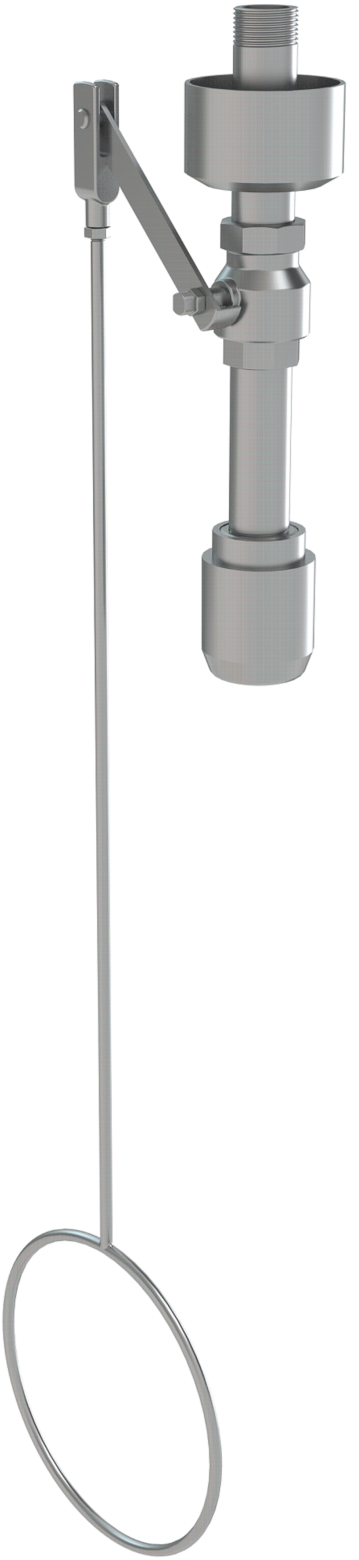

B-SAFETY® PROFESSIONAL SAFETY SOLUTIONS	Article: BR 083095/V	REV / DATE: 14.09.2022
PremiumLine variable Körper-Notdusche, für Deckenmontage Unterputz. Wasseranschluss 3/4-Zoll-AG.	PremiumLine variable body safety shower, ceiling mounted, recessed version. Water inlet 3/4" male.	