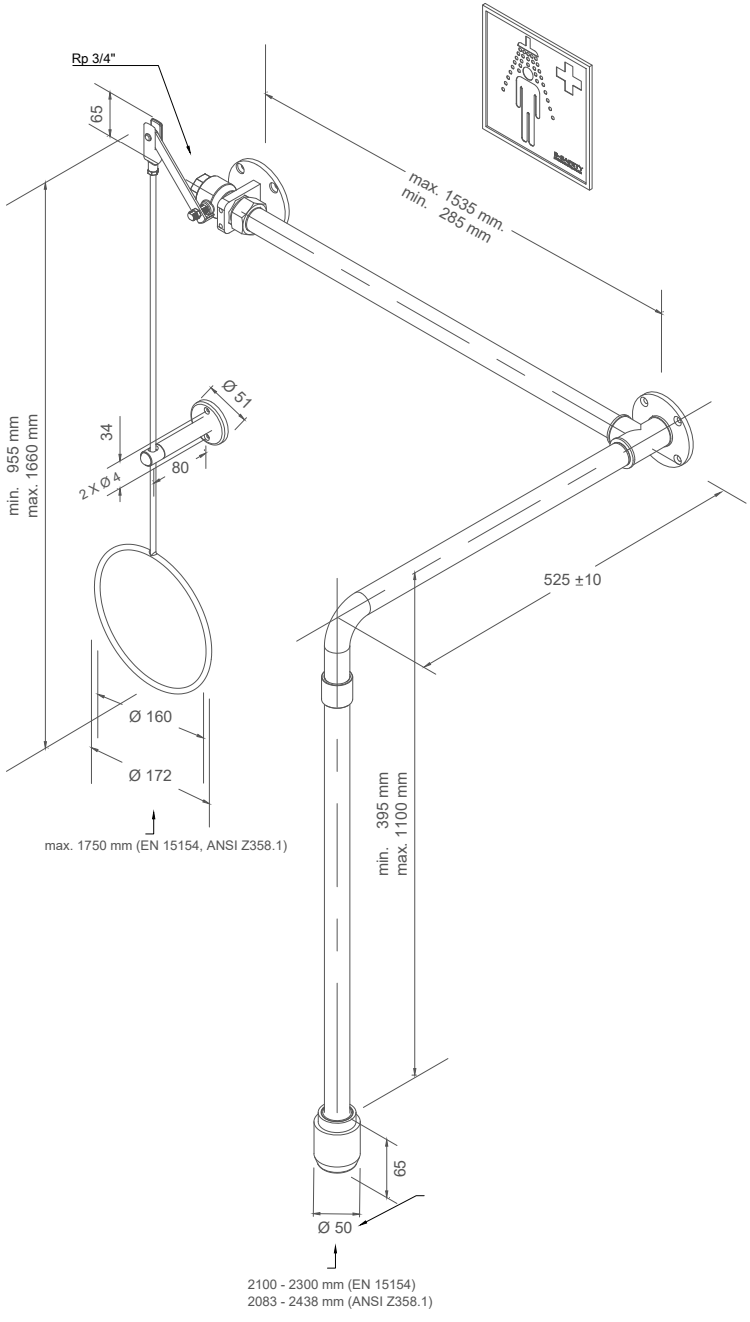

B-SAFETY PROFESSIONAL SAFETY SOLUTIONS	Article: BR084195/V	REV / DATE: 13.09.2022
PremiumLine variable Körper-Notdusche, für Über-Tür-Montage in 2850 mm Höhe, Aufputz. Wasseranschluss 3/4-Zoll-IG.	PremiumLine variable body safety shower, above door installation in 2850 mm height, exposed pipework. Water inlet 3/4" female.	